Cat. No. 01024821
Rev. I 05/09/17
DCO # 017180

Installation,
Operation, and
Service Instructions
with Parts Lists

CULLIGAN®
High Efficiency 1.5 Twin
Water Softener

Featuring the
Culligan® Smart Controller™

Models from 2012

Attention Culligan Customer:

Your local independently operated Culligan dealer employs trained service and maintenance personnel who are experienced in the installation, function and repair of Culligan equipment. This publication is written specifically for these individuals and is intended for their use.

We encourage Culligan users to learn about Culligan products, but we believe that product knowledge is best obtained by consulting with your Culligan dealer. Untrained individuals who use this manual assume the risk of any resulting property damage or personal injury.

NOTICE **Please send any suggestions for improving this manual to productmanuals@culligan.com**

WARNING! **Electrical shock hazard! Prior to servicing equipment, disconnect power supply to prevent electrical shock.**

WARNING! **If incorrectly installed, operated, or maintained, this product can cause severe injury. Those who install, operate, or maintain this product should be trained in its proper use, warned of its dangers, and should read the entire manual before attempting to install, operate, or maintain this product. Failure to comply with any warning or caution that results in any damage will void the warranty.**

CAUTION! **This product is not to be used by children or persons with reduced physical, sensory or mental capabilities, or lack of experience or knowledge, unless they have been given supervision or instruction.**

CAUTION! **Children should be instructed not to play with this appliance.**

CAUTION! **If the power cord from the transformer to the unit looks or becomes damaged, the cord and transformer should be replaced by a Culligan Service Agent or similarly qualified person in order to avoid a hazard.**

WARNING! **This device complies with Part 15 of the FCC rules subject to the two following conditions: 1) This device may not cause harmful interference, and 2) This device must accept all interference received, including interference that may cause undesired operation.**

This equipment complies with Part 15 of the FCC rules. Any changes or modifications not expressly approved by the manufacturer could void the user's authority to operate the equipment. Changes or modifications not expressly approved by the party responsible for compliance could void the user's authority to operate the equipment.

CAUTION! **To reduce the risk of fire, use only No. 26 AWG or larger telecommunications line cord.**

NOTE **This system is not intended for use with water that is microbiologically unsafe or of unknown quality without adequate disinfection either before or after the system.**

NOTE **Check with your public works department for applicable local plumbing and sanitation codes. Follow local codes if they differ from the standards used in this manual. To ensure proper and efficient operation of the Culligan equipment to your full satisfaction, carefully follow the instructions in this manual.**

Culligan International Company

9399 West Higgins Road, Suite 1100
Rosemont, Illinois 60018
1-847-430-2800
www.culligan.com

Installation, Operation, and Service Instructions with Parts Lists

Culligan® High Efficiency 1.5 Twin Water Softener

Featuring the Culligan® Smart Controller™

Models from 2012

Contents

Cat. No. 01024821

Analytical Laboratory Services

Water Testing Made Easy.

Culligan's Analytical Laboratory provides its customers with quality water analysis using EPA approved methods. Our Analytical Laboratory is certified by the State of Illinois EPA, to be compliant with the National Environmental Laboratory Accreditation Conference (NELAC) standards. In addition to Illinois chemical certification, our Analytical Laboratory is certified to perform coliform and E. coli testing.

We strive to provide our customers with the testing they need at the lowest possible cost with the quickest turn-around time.

STANDARD WATER TESTING
For sizing systems and general chemical water characteristics.

WELL WATER TESTING
- Basic
- Realtor
- Drilling Surveilance
- Expanded
- Gold

SPECIAL WATER TESTING
- Hemodialysis
- Scale
- Resin
- Organic
- Microbiology
- Membrane

Contact your local Culligan Dealer today to make sure your water is it's best it can be.

1-877-889-8195

E-mail: Water.Analysis@culligan.com

www.culligan.com

Culligan®

better water. pure and simple.®

Introduction

Read this Manual First

Before you operate the Culligan® High Efficiency 1.5 Twin Water Softener, read this manual to become familiar with the device and its capabilities.

Culligan® High Efficiency 1.5 Twin water softener systems are designed to meet the needs of applications for high quality water. This manual contains important information about the unit, including information needed for installation, operating, and maintenance procedures. A troubleshooting section provides a guide for quick and accurate problem solving.

In order for the water treatment system to continue to provide high quality water, you must develop a thorough understanding of the system and its operation. Review this manual before making any attempt to install, operate, or service the system. Installation or maintenance done on this system by an untrained service person can cause major damage to equipment or property damage.

The HE 1.5 Twin Water Softeners are tested and certified by WQA and IAPMO against NSF/ANSI 372, CSA B483.1, and NSF/ANSI Standard 61 for material requirements only. They are not certified for Contaminant Reduction or Structural Integrity by WQA and IAPMO.

The HE 1.5 Twin Water Softener Control Enclosure complies with the UL 50/50E and UL 746C standards for a NEMA 3R Enclosure Rating.

The HE 1.5 Twin Water Softener Systems are not intended for household use.

About this Manual

This manual:

- Familiarizes the operator with the equipment
- Explains installation and setup procedures
- Explains the various modes of operation
- Gives specifications and troubleshooting information

NOTE **Refer to the GBE Programming for Commercial Softeners and Filters, except HF xN Manual (P/N 01027295) for programming information. This manual can be obtained from your local dealer, on CPort (www.cport.culligan.com) under the Technical Service Tab or on the Service Tech App.**

Safe Practices

Throughout this manual there are paragraphs set off by special headings.

Notice

Notice is used to emphasize installation, operation or maintenance information which is important, but does not present any hazard. For example,

NOTICE **The nipple must extend no more than 1 inch above the cover plate.**

Caution and Warning

Caution is used when failure to follow directions could result in damage to equipment or property. For example,

CAUTION! **Disassembly while under water pressure can result in flooding.**

Warning is used to indicate a hazard which could cause injury or death if ignored. For example,

WARNING! **Electrical shock hazard! Unplug the unit before removing the timer mechanism or cover plates!**

The CAUTION and WARNING paragraphs are not meant to cover all possible conditions and situations that may occur. It must be understood that common sense, caution, and careful attention are conditions which cannot be built into the equipment. These MUST be supplied by the personnel installing, operating, or maintaining the system.

Be sure to check and follow the applicable plumbing codes and ordinances when installing this equipment. Local codes may prohibit the discharge of sanitizing or descaling solutions to drain.

Use protective clothing and proper face or eye protection equipment when handling chemicals or power tools.

NOTE **The Culligan High Efficiency 1.5 Twin Water Softener is not intended for use with water that is microbiologically unsafe or of unknown quality without adequate disinfection either before or after the system.**

NOTE **Check with your public works department for applicable local plumbing and sanitation codes. Follow local codes if they differ from the standards used in this manual. To ensure proper and efficient operation of the Culligan High Efficiency 1.5 Twin Water Softener to your full satisfaction, carefully follow the instructions in this manual.**

Basic Principles

What Is Hard Water?

Water is said to be hard when it carries too high a concentration of calcium and magnesium. Acceptable water hardness levels will vary depending on the application.

Why Should Hardness Be Removed?

Hard water causes scaling and etching which greatly impairs the life and efficiency of boilers, air-conditioning systems, cooling towers, water heaters, refrigeration plants and other equipment using water.

How Does It Work?

The components of dissolved minerals are called ions. They carry either a positive or negative charge. Hardness ions of minerals dissolved in water carry a positive charge. These positively charged ions (cations) are attracted to a synthetic softening material called ion exchange resin.

The heart of the softening system, therefore, is a deep bed of resin which draws calcium and magnesium ions, as well as ferrous iron, from the water as it passes through the resin bed.

Can The Resin Draw Out Hardness Ions Indefinitely?

No. During normal operation, the resin becomes saturated with positive ions and functions less efficiently. When hardness leakage occurs, the resin should be regenerated to restore its efficiency.

How Do You Regenerate Resin?

You regenerate a resin bed by removing the mineral ions through a process called ion exchange. This regeneration process occurs in four steps and takes approximately 80 to 90 minutes.

Backwash

During the backwash step, raw water flows rapidly upward (in reverse direction to the service flow) through the resin bed to expand the bed and flush out accumulated dirt, sediment and other sources of turbidity.

Brine Draw

The brine solution consisting of water and salt is drawn from a brine storage tank and allowed to flow slowly down through the resin bed. The brine solution removes the calcium and magnesium ions from the resin. This cycle can also be split into three “sub-cycles” which allow for the cost saving feature of brine reclaim.

Slow Rinse

Brine draw is then followed by a raw water slow rinse. This rinse step will slowly remove most of the remaining brine, exchanged calcium and magnesium ions from the resin. This cycle can also be split into three “sub-titles” which allow for the cost saving feature of brine reclaim.

Fast Rinse

Slow rinse is followed by a raw water flush, a very rapid down flow of raw water which removes the last traces of brine, and settles the resin bed.

How Often Must You Regenerate?

Frequency must be determined for each installation based on the amount of water usage, its degree of hardness and the amount of resin through which it flows. In some cases it is necessary to utilize a resin cleaner when the raw water contains iron. Contact your local Culligan dealer for more information.

How Do You Control The Regeneration Process?

The regeneration process for your commercial water softener is controlled automatically either on a predetermined time, volume, or external signal basis through the use of the Culligan Smart Controller with optional flow sensor. See the Installation chapter for further information. The regeneration process can also be initiated manually by the operator as required.

Specifications for High Efficiency 1.5 Twin Water Softeners

Culligan commercial water softeners are designed to remove hardness minerals from water. In order to function properly, some operational parameters must be followed. They include:

1. An operating water pressure between 20 and 125 psi (138-862 kPa). If water pressure is greater than 80 psi, Culligan recommends following the IAPMO Uniform Plumbing code section 806.2 by installing a Pressure Regulating Valve before the system. Operating on high presure for extended periods of time can increase the service frequency of replacement parts. If water pressure can drop below the minimum water pressure, add a booster pump to maintain a 25 psi (172 kPa) minimum operating pressure.
2. Operating temperature between 33° and 120°F or 1°–49°C.
3. Clear (non-turbid) water supplies (Less than 5 NTU).

Table 1. HE 1.5 Twin Specifications (U.S. units).

Model No.	Exchange Capacity (kgr) Per Tank		Service Flow Rate (gpm) Per Tank		Backwash Flow Rate (gpm) Per Tank	Minimum System WxHxD Dimensions (in.)
	Maximum (grains)	Minimum (grains)	Continuous @ 15 psi max. pressure loss	Peak @ 25 psi. max. pressure loss		
HE-060	60	40	25.1	31.5	5.5	58x60.1x16
HE-090	90	60	26.6	35.2	5.5	68x62.7x20
HE-120	120	80	23.3	31.8	5.5	68x74.7x20
HE-150	150	100	27.2	35.8	7	72x76.3x21
HE-210	210	140	28.0	37.4	11.5	78x77x23

Table 2. HE 1.5 Twin Specifications (Metric units).

Model No.	Exchange Capacity (kgr) Per Tank		Service Flow Rate (lpm) Per Tank		Backwash Flow Rate (l/min) Per Tank	Minimum System WxHxD Dimensions (cm)
	Maximum (grains)	Minimum (grains)	Continuous @ 1 bar drop	Peak @ 1.7 bar drop		
HE-060	60	40	95.1	140.0	20.8	147x152x41
HE-090	90	60	100.8	143.8	20.8	173x157x51
HE-120	120	80	88.3	132.5	20.8	173x188x51
HE-150	150	100	103.1	135.5	26.5	183x193x53
HE-210	210	140	106.0	141.6	43.5	198x196x58

NOTE **Dimensions assume systems include an optional, standard size brine tank. The measured width includes the supplied interconnecting pipe.**

NOTE **Allow a minimum of 24" above the overall system height for access into the top of tank(s).**

Installation

NOTE Read this section carefully. Follow all local plumbing and electrical codes.

Each HE 1.5 Twin water softener contains the following item(s):

- FRP water softening media tanks.
- Control valves
- Media—refer to the table below for quantities of: Cullex Resin and Cullsan underbedding
- Manifold kit(s)

Included with valve:

- Meter
- 1½ NPT Plastic Adapter
- Softener Kit
  - Drain line flow controls
  - Brine connection coupling, tube fitting
  - Drain line fitting and clamp
  - Extra eductors
- Twin Small Parts Kit
- Optional Brine tank
- Optional manual 1.5" bypass valve (P/N 01024216)

Locate Softener

1. Select a space that is level and allows a sufficient amount of room above and behind the softener tank(s) for service access and plumbing supply and drain lines. Allow a minimum of 24 inches (61 cm) above the top of the system.

NOTE Upon initial installation or in the event the distribution pipe ever needs to be replaced, as much as 75 inches (191 cm) of clearance may be required above the tank if it is not possible to SAFELY lie the tank on its side for installation/replacement of this distributor.

2. Floor surface—Choose an area with a smooth, solid and level floor capable of supporting the operating weight of the softening system.
3. Drain facilities—A nearby drain must be capable of handling the water softener discharge flow rates during the backwash cycle of the regeneration process. Refer to the Specifications on page 3 for information concerning the backwash flow rate.
4. Screw the control assembly onto the empty media tank until it seats. Mark the front of the tank, then remove the control assembly.

Install Distribution System

⚠	**CAUTION! Do not attempt to use any distribution part that is damaged. Doing so may create operational problems and/or create a substantial risk of consequential damage not covered by the product warranty.**

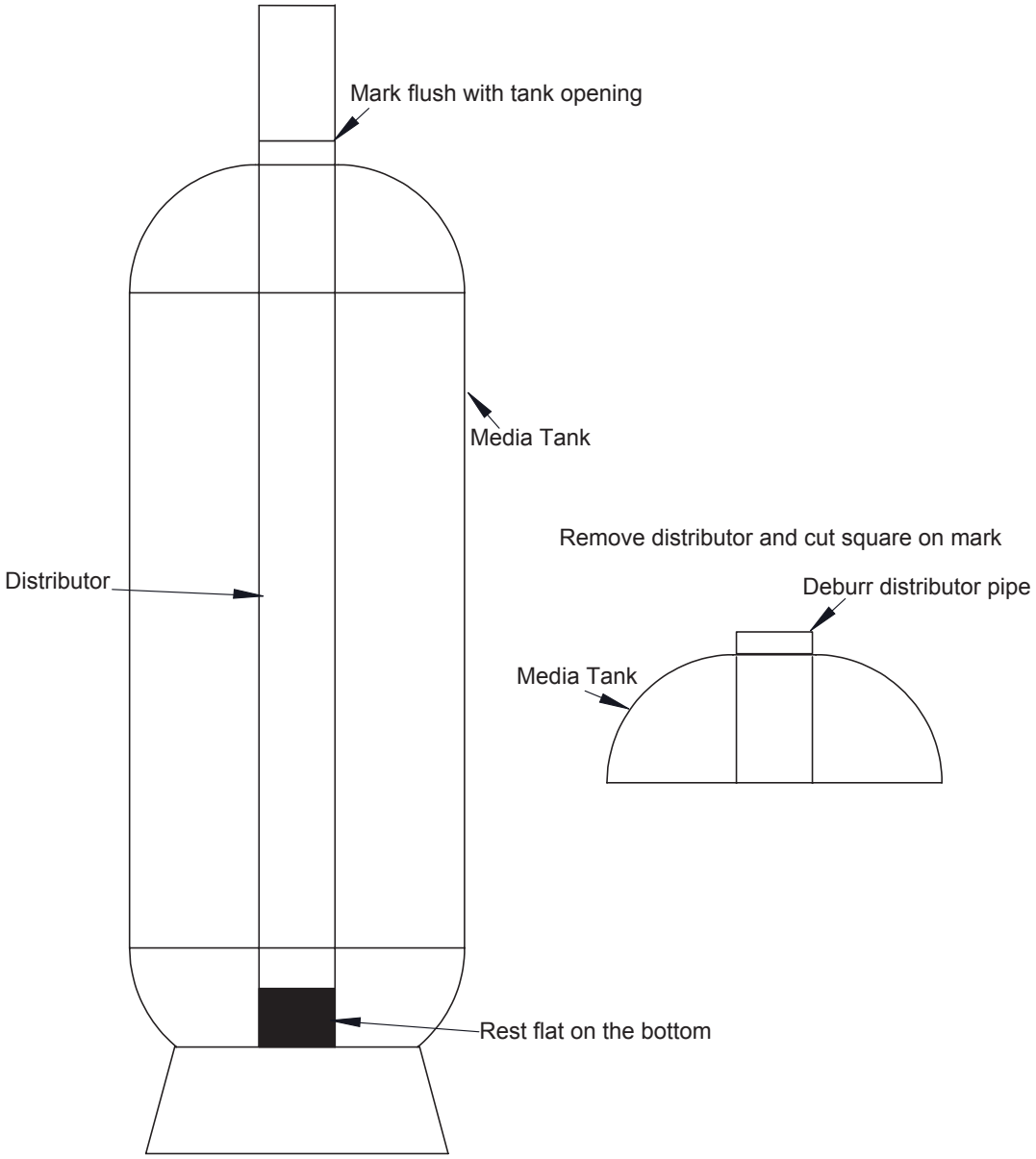

Figure 1. Install Distribution System

Loading the Media

Table 3. Loading quantities.

Model	HE-060	HE-090	HE-120	HE-150	HE-210
Cullex (Ft^3)	2	3	4	5	7
Cullsan (lbs)	30	40	40	70	80
Freeboard (inches)	24	27	30.5	30	27.5

NOTE Do NOT attempt to load the media without having the tank in its final position. Moving the tank once the media has been loaded will be difficult at best.

1. Cover the top of the distributor pipe with tape that will prevent media from entering the distributor.
2. Use a funnel (P/N 01029516) in the opening to add 6” of water to protect the distributor. Pour Cullsan per Table 3, level before adding resin

NOTE If you are planning on using an Aqua-Sensor device for regeneration initiation, install now on the lead tank only (page 27).

3. Pour bags of Cullex per Table 3.
4. Clean tank threads, remove tape and check for any foriegn materials

NOTE Minimize the amount of water added until final positioning of the tank with the control valve mounted.

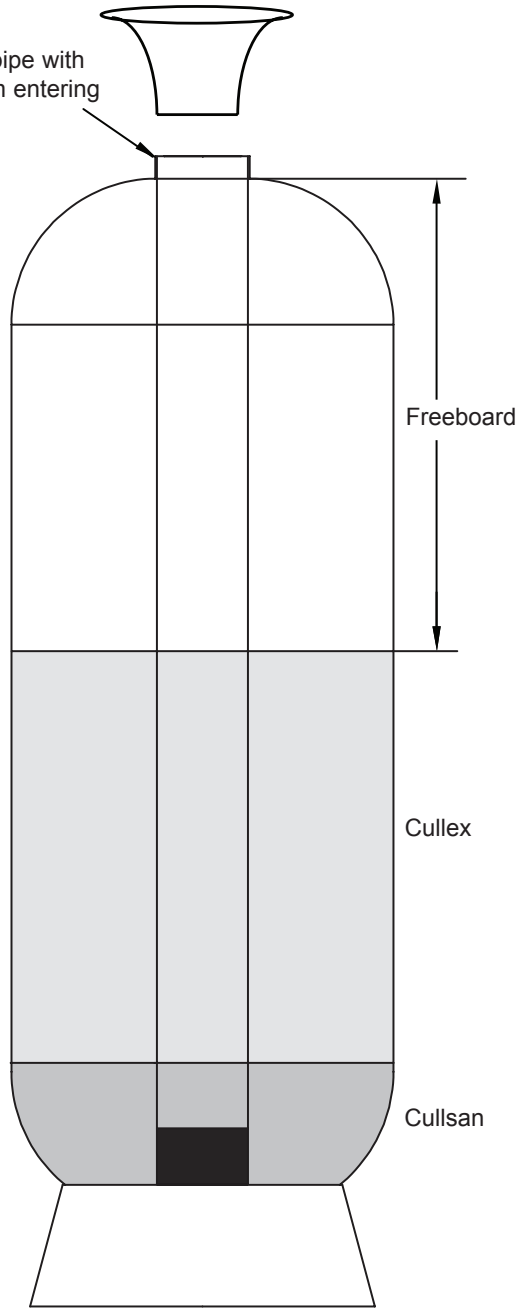

Figure 2.

Mount the Control Valve

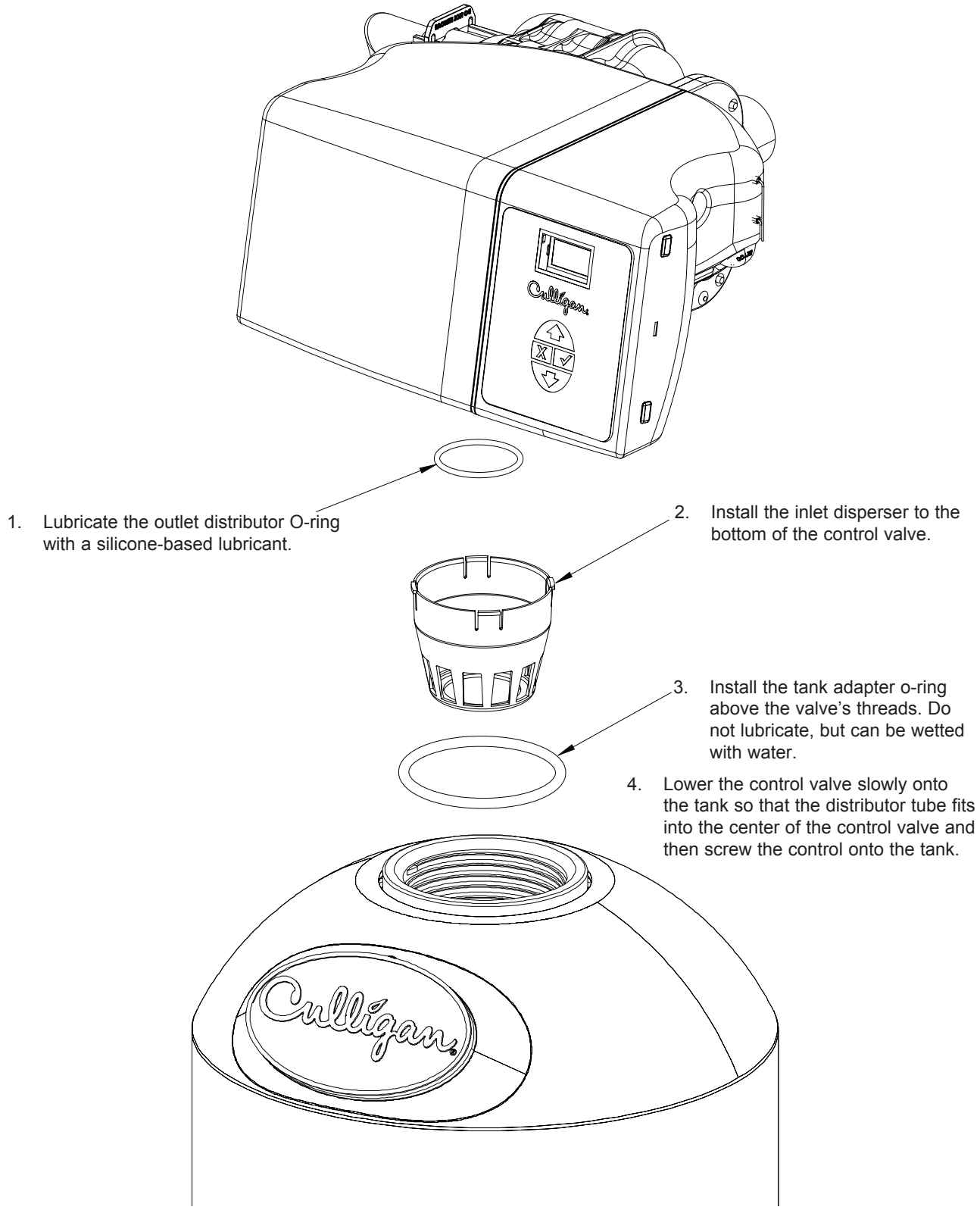

Figure 3. Mounting the control valve.

Install Piping

1. Depending on the type of softener system and the installation parameters, required pipe lengths and piping accessories will vary. See Figure 4 to aid the installation. If the layout drawings are not sufficient for your application, consult the Culligan dealer for specific installation guidelines.

NOTE	**The use of unions and inlet and outlet isolation valves is recommended to facilitate the servicing of the system. It is also recommended a full flow by-pass line be provided.**

CAUTION!	**All soldering MUST be done on any connections requiring soldering prior to connecting the main control valve. The main control valve will be damaged if it is connected at the time of soldering.**

2. Follow good plumbing practices for installation. These include:
   a. Check threads and make certain that they are clean and free of foreign matter.
   b. Fittings must be free of cracks or chips.
   c. Prepare threads with either a pipe dope sealant or Teflon tape.
   d. Make certain that the fittings are not cross threaded during the assembly process.
   e. Do not over-tighten fitting or threaded pipe being inserted into a cast or forged part.

CAUTION!	**Never connect two dissimilar metals (such as copper and steel) together. The use of dielectric unions or schedule 80 PVC or PVC plastic to break the connection is highly recommended in order to reduce the risk of galvanic reaction and subsequent corrosion.**

CAUTION!	**The media tank must never be subjected to an internal vacuum or it might be damaged. Drain line suction can be prevented by piping the system in similar fashion to that shown in Figure 4. A vacuum breaker may be installed on either the inlet or the outlet side of the vessel as close to the vessel as possible, preferably between the vessel and any isolating valves. If an installation has a booster pump downstream of the vessel, install the vacuum breaker on the outlet side. Do not install a vacuum breaker on the drain line. Use a vacuum breaker, such as Culligan 00401584 or 01003701. Multi-tank systems will require at least one vacuum breaker per tank.**

Suggested Piping Installations

The piping layouts below depict a traditional three-valve bypass. Culligan also offers an optional bypass valve that connects directly to the inlet and outlet of the water softener.

NOTE **Interconnecting pipe and fittings, bypass valves, and isolation valves are not supplied.**

CAUTION! **DO NOT make a direct connection to the drain. Provide an air gap of at least four times the diameter of the drain pipe or conform to local sanitation codes and to permit the observation of drain flow.**

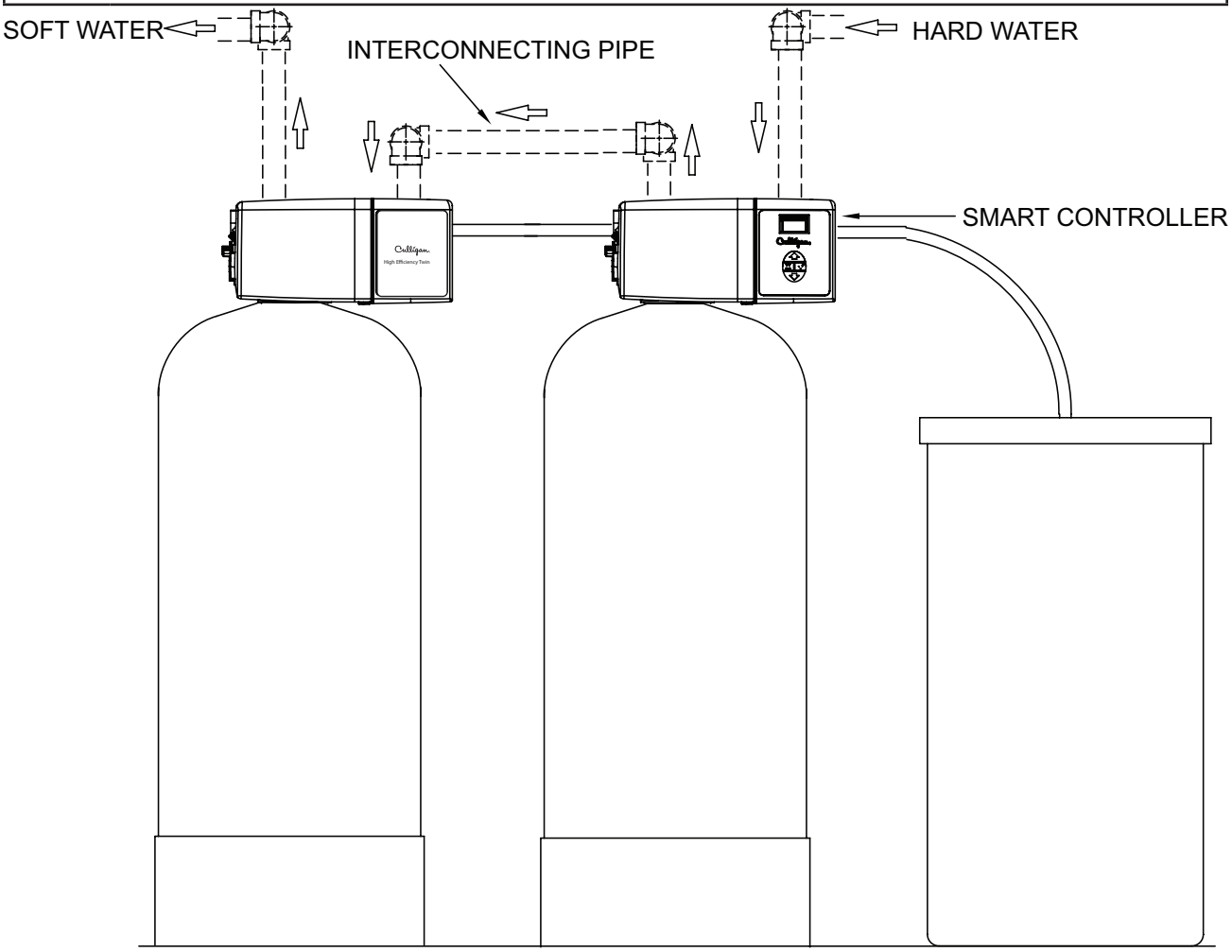

Figure 4.HE 1.5 Twin tank piping.

NOTE **The base unit is set up for the 14" diameter, 60,000 grain system. If you are installing the 60,000 grain system, then no changes are required to the control. If you are installing any other size system, refer to Table 4 on page 10 for any additional changes. The items that are marked with an asterisk are already in the valve.**

Drain Line Flow Control, Eductor Nozzle—Throat

Use the recommended drain line flow control, eductor nozzle, and eductor throat for various size tanks. See Table 4.

NOTE Use the same setup for both valves.

Refer to Figure 5 through Figure 8 and instructions below for changing the drain line flow control, eductor nozzle, and eductor throat.

Table 4. HE 1.5 injector settings.

Model	Drian Line Flow Control	Nozzle	Throat	Brine Refill Flow
HE-060	5.5 gpm*	Green*	Blue*	0.8 gpm
HE-090	5.5 gpm*	Green*	Blue*	0.8 gpm
HE-120	5.5 gpm*	Green*	Blue*	0.8 gpm
HE-150	7 gpm	Green*	Blue*	0.8 gpm
HE-210	11.5 gpm	Yellow	Blue	0.8 gpm
*Shipped assembled inside the control standard from factory				

Eductor Nozzle and Throat Replacement

Refer to Table 4, Figure 5 and the instructions below when changing the eductor nozzle and throat.

1. Remove the eductor cap clip.
2. Remove the eductor cap.
3. Remove the eductor assembly.
4. Remove the eductor screen from the assembly.
5. Remove the nozzle and eductor throat and replace it with the correct nozzle.
6. Make sure to put the O-ring on the nozzle.
7. Replace the eductor throat if required.
8. Reverse the procedure to reassemble.
9. For downflow regeneration, the arrow on the eductor cap should face down.

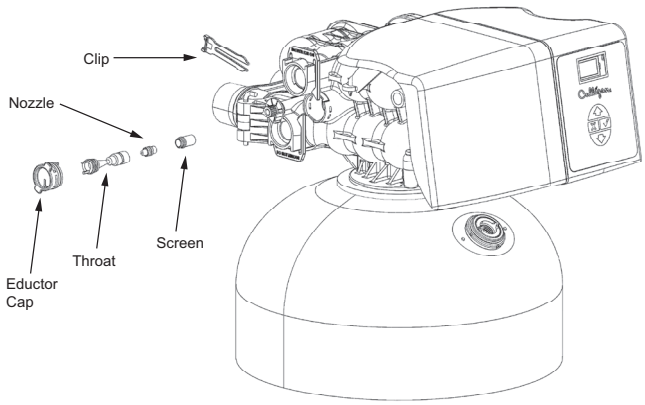

Figure 5. Removing the eductor nozzle and throat.

CAUTION! DO NOT make a direct connection to the drain. Provide an air gap of at least four times the diameter of the drain pipe or conform to local sanitation codes and to permit the observation of drain flow.

Drain Line Flow Control Replacement

Refer to Table 4, Figure 8, and the instructions below to replace the drain line flow control.

1. Remove the cover by releasing the cover fastener from the control valve. See Figure 6 and Figure 7.
2. Remove the drain clip and pull off the drain elbow.
3. Remove the backwash flow control located behind the elbow.
4. Install the correct drain line flow control.
5. Reverse the procedure to reassemble.

NOTE The number on the flow control should face into the valve body.

NOTE Do not re-install the cover until the drain line tubing is connected.

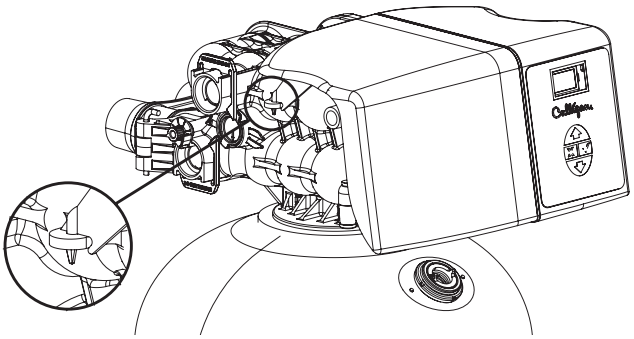

Figure 6. HE 1.5 Twin valve cover fastener clip.

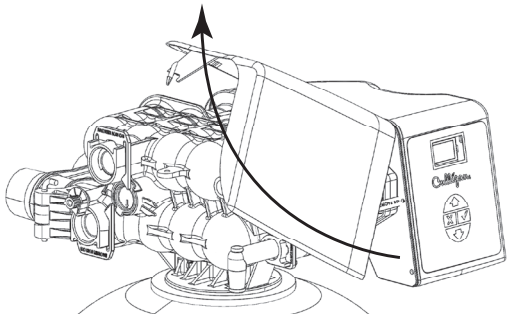

Figure 7. Removing the HE 1.5 Twin valve cover.

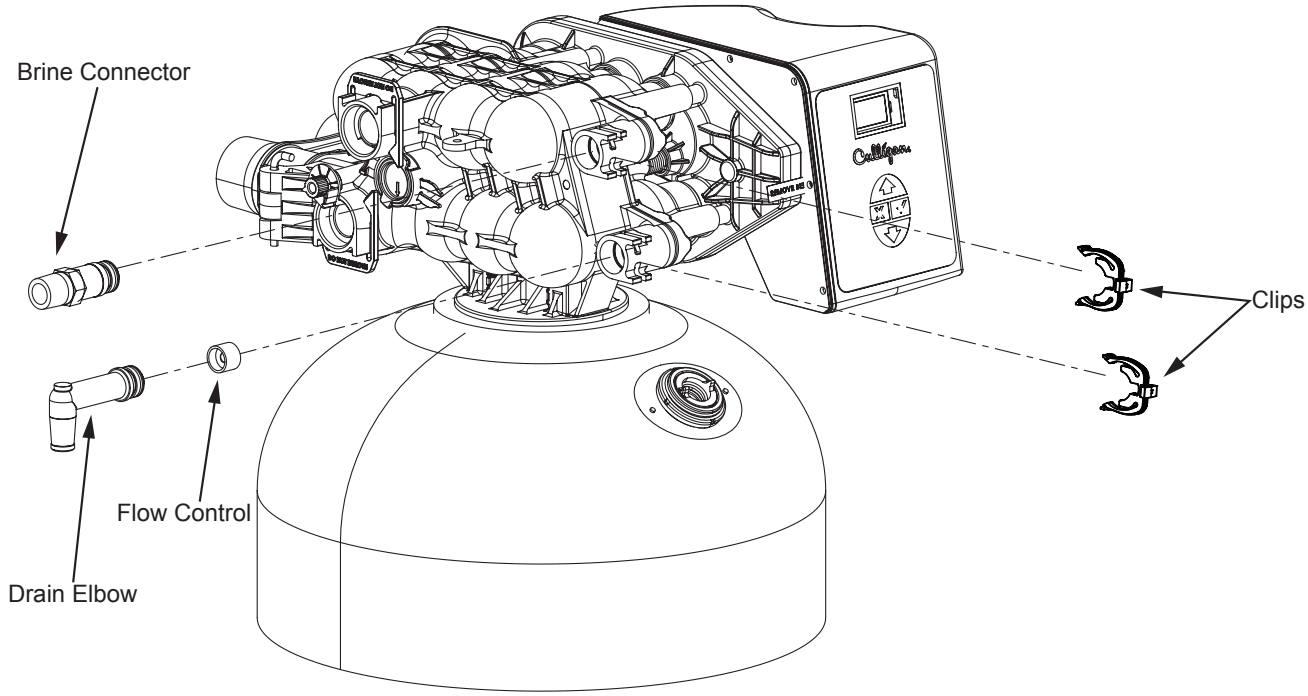

Figure 8. Replacing backwash flow control.

Attaching the Cover

Once the drain and brine line is connected re-attach the cover. Refer to the below instructions and Figure 9 through Figure 11.

1. Insert the two pins on the top of the cover into the two holes on top of the frame; the cover should be slightly angled. See Figure 10.
2. Rotate the cover downward inserting the two pins on the side of the cover into the two holes on side of the frame. See Figure 10.
3. Attach the cover fastener onto the control valve. See Figure 11.

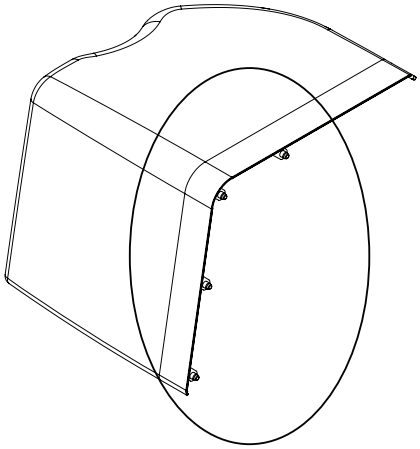

Figure 9. Cover fastener clip.

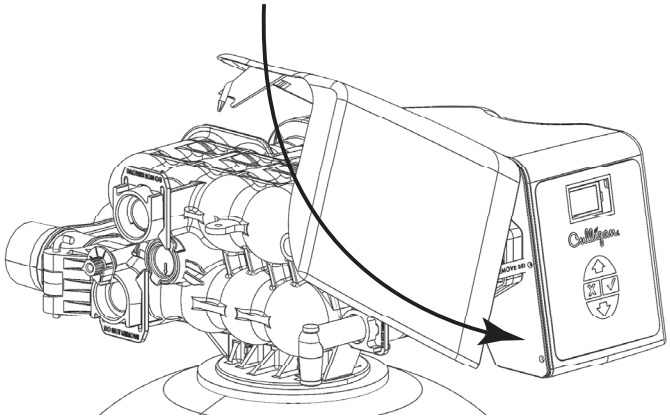

Figure 10. Reattaching the HE softener cover.

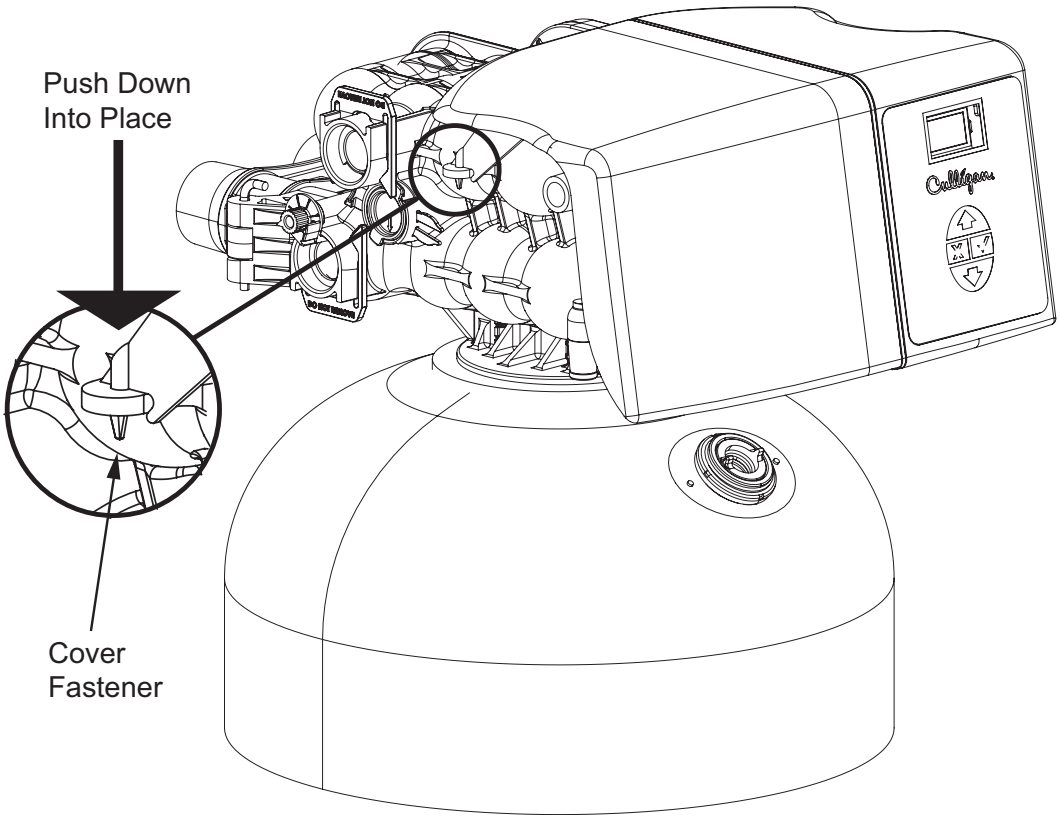

Figure 11. Reattaching the cover fastener.

Dial-a-Softness

Dial-a-Softness is a manual adjustment built into the control valve that allows for variable hardness bypass into the softened water. The hard water bypass can be adjusted to produce 1–3 gpg hardness bleed. Shipped from the factory the Dial-a-Softness knob is set to the “SOFTEST” position (no hard water bypass). See Figure 12.

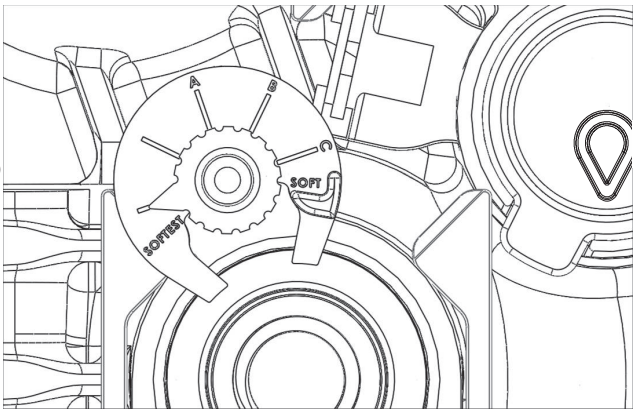

Figure 12. Dial-a-Softness knob.

To set the Dial-a-Softness:

1. Locate the Dial-a-Softness knob on the control valve.
2. Set the Dial-a-Softness knob to position A, B, or C as outlined in the table below, based on raw water hardness; this should produce a 1–3 gpg hardness bleed.

Letter on Dial-a-Softness Knob	1–3 gpg Hardness Bleed
SOFTEST	No Bleed
A	On between 20–30 gpg feed
B	On between 10–20 gpg feed
C	On less than 10 gpg feed

NOTE **The HE 1.5 Twin must take into account the adjusted capacity if the Dial-a-Softness was changed. See the GBE Programming for Commercial Softeners and Filters, except HF xN Manual (P/N 01027295) to update the Dial-a-Softness setting.**

Straight-Through Adapter

Shipped with each softener is a Culligan® straight-through adapter, which is used to connect the softener to the plumbing system.

CAUTION! **Close the inlet supply line and relieve the system pressure before cutting into the plumbing! Flooding could result if not done!**

Straight-Through Adapter Installation

Refer to Figure 13 and the instructions below to connect the meter, straight-through adapter, and interconnecting pipe.

NOTE **Use the same setup for both valves.**

1. All HE 1.5 Twin units are equipped with a meter. The meter is installed on the outlet side of the control valve. The meter body fits in the same space as the coupling between the control valve and the straight through adapter. Make sure the arrow on the flow meter is pointing in the direction of the flow.
2. The straight-through adapter connects directly to the control valve with the meter and coupling and two assembly pins. Lubricate all O-rings on the couplings/meter with silicone lubricant. See Figure 13.
3. Connect the interconnecting pipe. The interconnecting pipe is connected to the outlet of Control #1 and the inlet of Control #2.

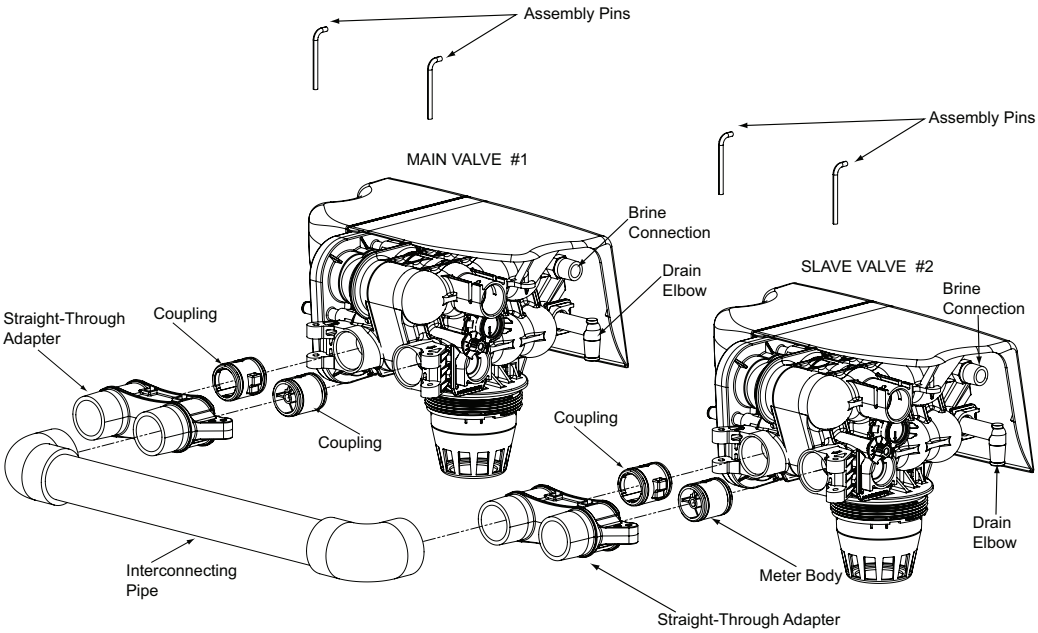

Figure 13. Straight-Through Adapter assembly.

NOTE	**The Low Flow Meter has a white dot on the connection for the wire harness.**

NOTE	**If the ground from the electrical panel or breaker box to the water meter or underground copper pipe is tied to the copper water lines and these lines are cut during installation of the straight-through adapter, an approved grounding strap must be used between the two lines that have been cut in order to maintain continuity. The length of the grounding strap will depend upon the number of units being installed. In all cases where metal pipe was originally used and is later interrupted by the straight-through adapter to maintain proper metallic pipe bonding, an approved ground clamp c/w not less than #6 copper conductor must be used for continuity. Check your local electrical code for the correct clamp and cable size.**

Optional Bypass Valve Installation

Refer to Figure 14 and the instructions below to connect the meter, bypass valve, and interconnecting pipe.

1. All HE units are equipped with a Soft-Minder® meter. The meter is installed on the outlet side of the control valve. The meter body fits in the same space as the coupling between the control valve and the bypass. Make sure the arrow on the flow meter is pointing in the direction of the flow.
2. The bypass valve connects directly to the control valve with the meter and coupling and two assembly pins. Lubricate all O-rings on the couplings/meter with silicone lubricant.

NOTE	**The Low Flow Meter has a white dot on the connection for the wire harness.**

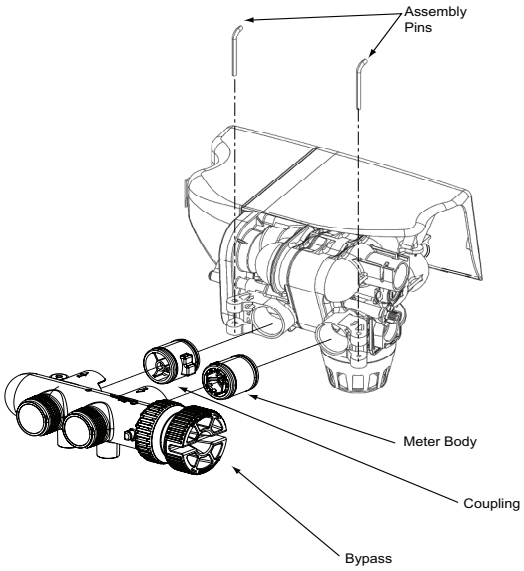

Figure 14. Bypass valve assembly.

Optional Bypass Valve Operation

To bypass, turn the blue knob clockwise (see directional arrow on end of knob) until the knob stops as shown. DO NOT OVERTIGHTEN! (Figure 15). To return to service, turn the blue knob counter-clockwise (see directional arrow on the end of knob) until the knob stops as shown. DO NOT OVERTIGHTEN! (Figure 16)

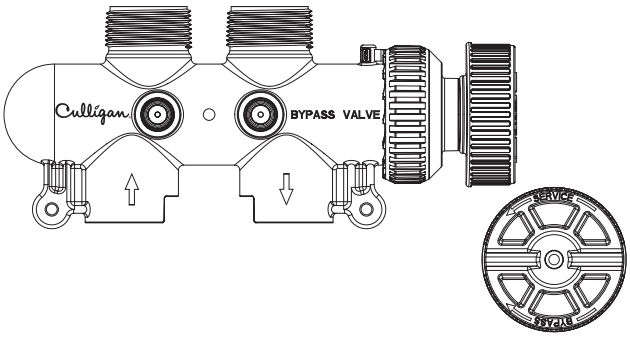

Figure 15. Turn blue bypass knob clockwise.

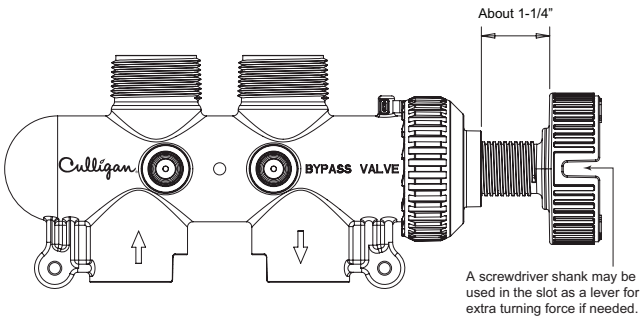

Figure 16. Turn bypass knob counter-clockwise.

Drain Line Connection

Refer to Table 5 for drain line length and height limitations under the applicable tank size.

1. Remove 1/2” pipe clamp from the small parts pack included with the control.
2. Route a length of 1/2” drain line from the drain elbow to the drain.
3. Fasten the drain line to the elbow with the clamp.
4. Secure the drain line to prevent its movement during regeneration. When discharging into a sink, or open floor drain, a loop in the end of the tube will keep it filled with water and will reduce splashing at the beginning of each regeneration.

NOTE Waste connections or drain outlets shall be designed and constructed to provide for connection to the sanitary waste system through an air gap of four pipe diameters or 1 inch, whichever is larger.

NOTE Note: Observe all plumbing codes. Most codes require an anti-siphon device or air gap at the discharge point. The system and installation must comply with state and local laws and regulations.

Table 5. Height of discharge above floor level operating.

Operating Pressure	0 ft (0 m)	2 ft (0.6 m)	4 ft (1.2 m)	6 ft (1.8 m)	8 ft (2.4 m)	10 ft (3 m)
30 psi (210 kPa)	60 ft (18 m)	50 ft (15 m)	30 ft (9 m)	15 ft (5 m)	Not allowable	Not allowable
40 psi (279 kPa)	100 ft (30 m)	90 ft (27 m)	70 ft (21 m)	50 ft (15 m)	30 ft (9 m)	12 ft (4 m)
50 psi (349 kPa)	145 ft (41 m)	115 ft (35 m)	80 ft (24 m)	80 ft (24 m)	60 ft (18 m)	40 ft (12 m)
60 psi (419 kPa)			100 ft (30 m)	100 ft (30 m)	85 ft (26 m)	60 ft (18 m)
80 psi (559 kPa)	Normal installation should not require				140 ft (43 m)	120 ft (37 m)
100 psi (699 kPa)	more than 100 ft (30 m) of drain line					150 ft (46 m)

Brine System Installation

NOTE	**The brine system is purchased as an optional item to allow the use of various brine tank sizes to better suit the needs of the user.**

The softener system is normally regenerated using a timed brine refill, dry or wet salt storage brine system. To properly install the brine system, set the brine tank assembly in a convenient location for ease of service and refill of salt into the brine tank.

Brine Piping

The softeners can be used with a variety of brine systems. Please refer to Table 8 on page 35 for sizing parameters. Position the salt storage tank in a convenient location on a smooth surface. The brine valve should be at the rear to simplify removal of the tank cover.

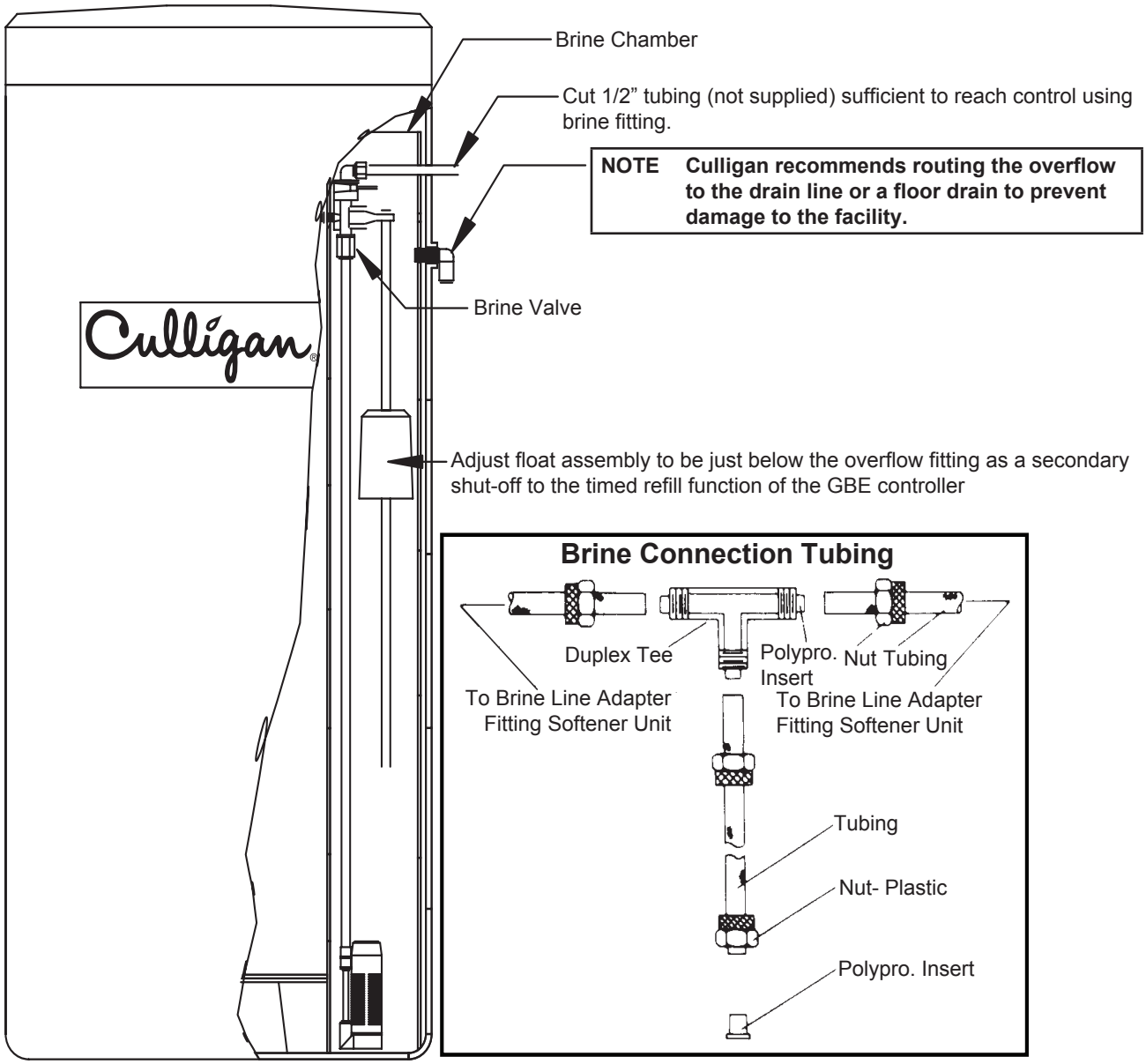

If multiple softeners will be drawing brine from the same tank, connect the brine tubing from the brine fitting on each valve to a union tee. (P/N 00401574, supplied with small parts pack)

Circuit Board Connections

The 24V power supply and flow meter wire harness is already connected to the circuit board. If no other circuit board connections are required proceed to the First Time Setup. Refer to the instructions below and Figure 17 to Figure 30 for connecting accessories, including the Aqua-Sensor probe wire harness, to the circuit board.

WARNING! Disconnect all electrical power to the unit before connecting.

CAUTION! Grip all connections to the circuit board by the connecting terminals for assembly and disassembly. Failure to do so could result in damage to the wire leads or connecting terminals.

CAUTION! Do not touch any surfaces of the circuit board. Electrical static discharges might cause damage to the board. Handle the circuit board by holding only the edges of the circuit board. Mishandling of the circuit board will void the warranty.

NOTE Observe all state and local electrical codes.

1. Remove the electrical enclosure from the control valve. First remove the electrical enclosure screw and then gently remove the enclosure from the control. Refer to Figure 17 and Figure 18 and the following instructions.

NOTE The compartment plate is tightly connected to the enclsure and might be removed at the same time as the enclosure.

2. Remove the compartment plate from the enclosure, placing the plate against the frame.
3. Disconnect the 24V power supply wire harness from the circuit board. See Figure 17.
4. Grip the circuit board from the edges and gently rotate it to the back of the enclosure (you are disengaging the circuit board from the two support pins on the bottom and top of the enclosure). See Figure 18.
5. Remove the circuit board from the enclosure.

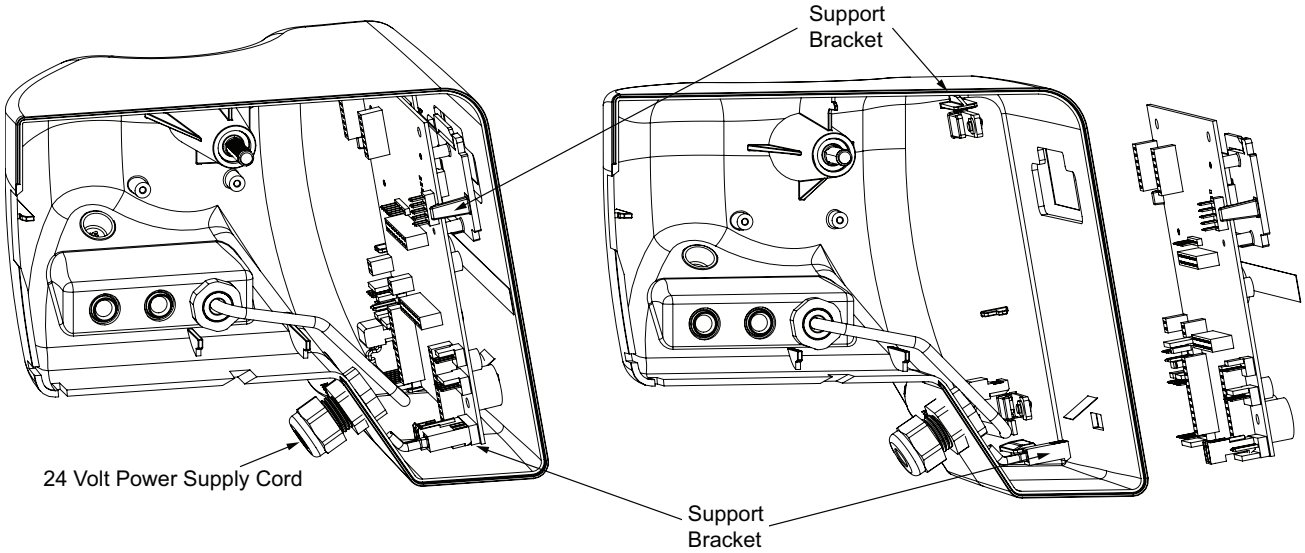

Figure 17. Circuit board power supply. Figure 18. Circuit board removal.

To install HE 1.5 Twin accessory connections:

1. Remove the plastic nut from the meter strain relief fitting from HE 1.5 Twin Controller #1.
2. Disconnect the wire harness from the circuit board of HE 1.5 Twin Controller #1 and remove the harness.

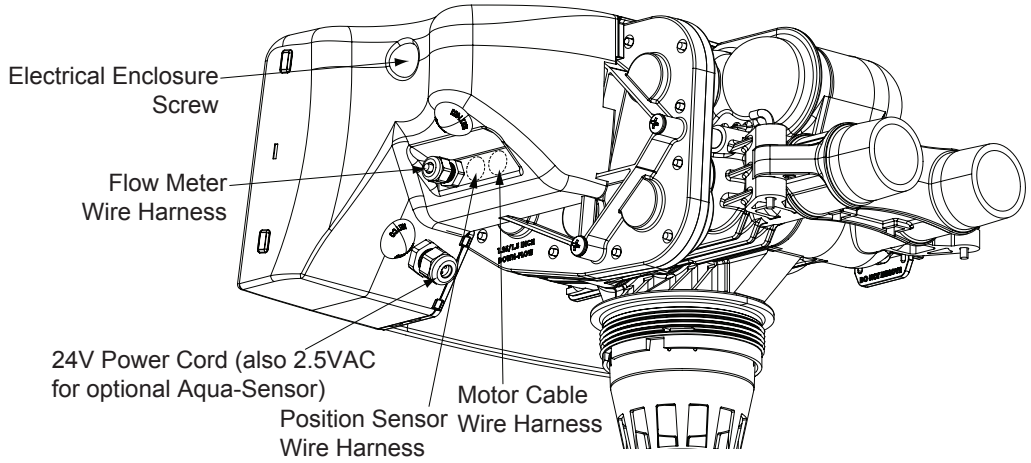

Figure 19. HE 1.5 Twin,main controller #1, electrical and accessory connections.

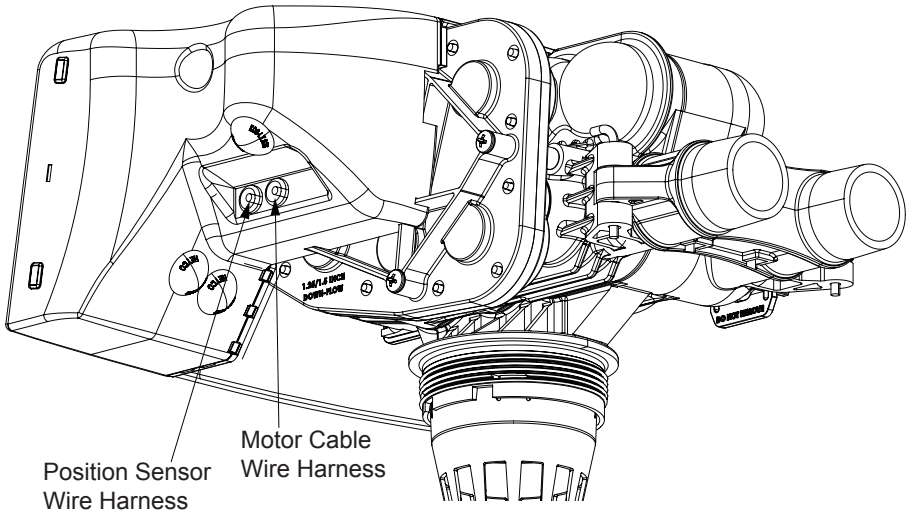

Figure 20. HE 1.5 Twin, controller #2, electrical and accessory connections.

3. Connect the auxiliary board to the main board. See Figure 19. The auxiliary board is shipped inside the carton for HE 1.5 Twin Controller #2.
4. Open the two ports through the molded recessed area (area #4). See Figure 19. Use a sharp object (screwdriver or knife) to push through the plastic.
5. Connect the motor cable, optical sensor cable, and meter cable from the HE 1.5 Twin Controller #2 to the auxiliary board (see "Electrical Schematic" on page 26).
    a. Remove the plastic nut from the strain relief fitting.
    b. Place the harness and fitting through the port.
    c. Tighten the nut on the interior of the enclosure.
    d. Attach the connector to the appropriate location on the HE circuit board. See "Electrical Schematic" on page 26.

Installing Accessory Connections

The HE 1.5 Controller enclosure has several portals to allow connections to HE accessories. Each connection portal is molded into the controller enclosure. If the portal is not already opened and/or plugged, it may be opened by pushing a sharp object (screwdriver or knife) through the plastic. See Figure 21.

A connector/bushing and/or plug should be placed in the port assigned for each HE 1.5 accessory. See Figure 21 and Figure 22 and Table 6 for connector/bushing and plug types and their position on the HE 1.5 Controller enclosure.

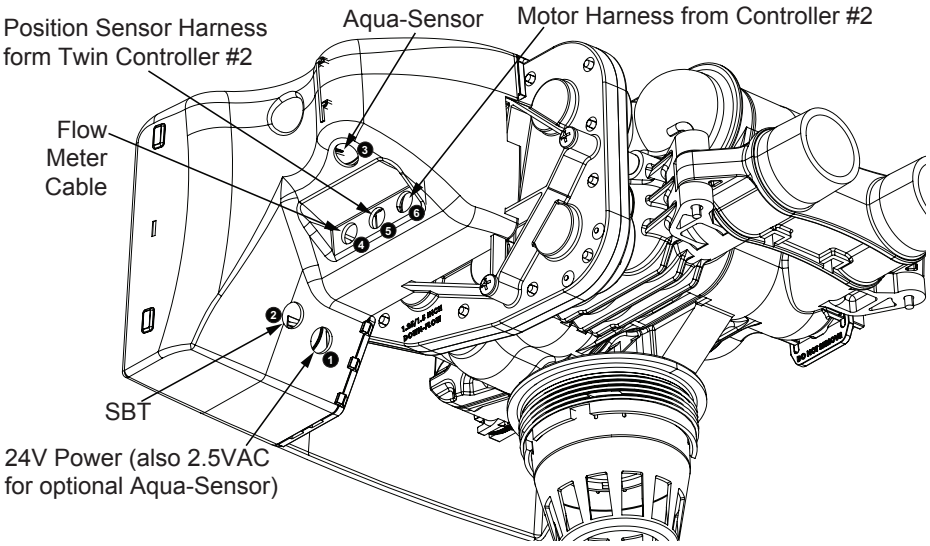

Figure 21. HE 1.5 Twin #1 Controller connection ports.

Figure 22. Connectors.

Table 6. Accessory connectors and possible connections.

Part No.	Description	Location(s)	Connection
P1025274	Strain Relief Fitting, 10 PK	1	24V Power (pre-installed)
P1025264	Strain Relief Fitting, 10 PK	1, 2, 3	Aqua-Sensor, SBT, replaces 01025274 when used with optional 2.5VAC Power
P1025277	Liquid Tight Hole Plug, 10 PK	1, 2, 3,	—
P1025278	Bushing, strain relief, 10 PK	4, 5	HE 1.5 Twin #2 Position Sensor, Harness, HE 1.5 Twin #2 Motor Harness
—	Cord Grip, Liquid Tight	4, 5, 6	Flow Meter Harness

To install an HE 1.5 accessory connection:

1. Remove the plastic plug from the port on the enclosure, or open the port through the molded recessed area.
2. Remove the plastic nut from the bushing attached to the preinstalled connector cable.
3. Place the bushing with the cable through the port.
4. Tighten the nut on the interior side of the port opening on the controller enclosure. See Figure 23.
5. Attach the female connector to the Smart Controller circuit board at the appropriate location.

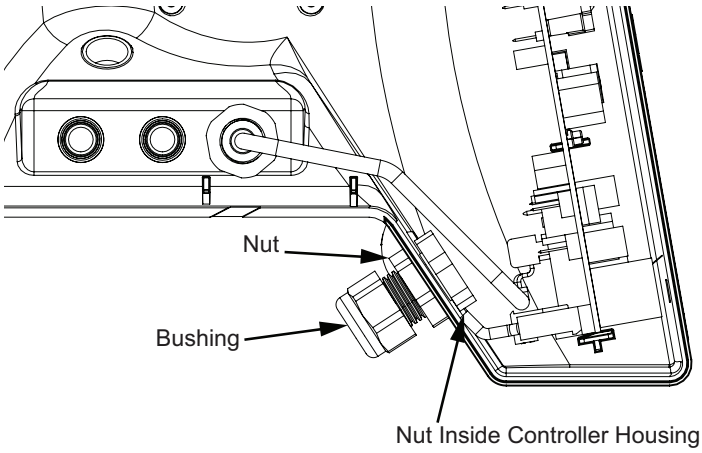

Figure 23. Connector bushing and nut position.

Installing Aqua-Sensor

1. Locate the Aqua-Sensor 2.5VAC power cord and bushing (01025264) packed in the small parts pack. The power cord has two spade terminals on one end of the cable and a plastic female connector on the other end.
2. Disconnect power from the circuit board.
3. Remove the power cord bushing (P/N 01025274) from the outdoor enclosure (location #1 in Figure 21) by loosening the nut from the 24V power cord bushing.
4. Discard the dummy connector on the 2.5VAC circuit board pins.
5. Remove the bushing cable assembly from the enclosure.
6. Press a small screwdriver into the slots on the plastic female connector housing to remove the two metal slip-in tabs on the 24V power cord. See Figure 24.
7. Remove the 01025274 bushing from the 24V power cord.
8. Insert the 24V and 2.5VAC power cords through the shared bushing (P/N 01025264). See Figure 25.
9. Use a small screwdriver to raise the tongue on each metal tab so it is protruding at the top. Reinstall the tabs in the housing. Tug lightly on the cord to make sure the tab does not pull free from the housing. See Figure 24.

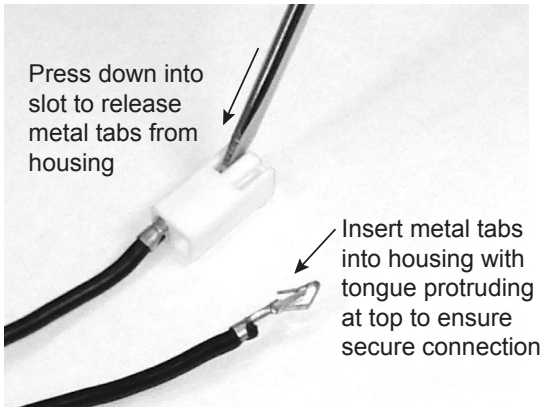

Figure 24.

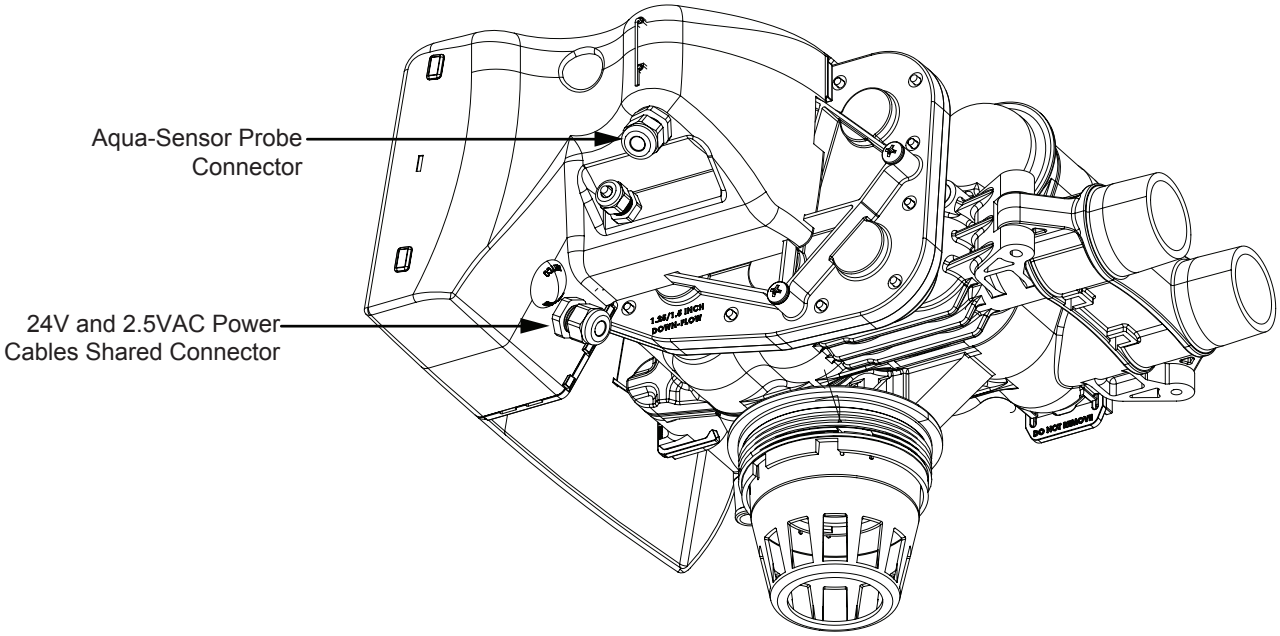

Figure 25. 24V Power and Aqua-Sensor connections on the controller.

10. Reinstall the terminal plugs on the 24V plastic connector.
11. Place the bushing with the cable through the opening and tighten the nut that is on the interior of the enclosure.
12. Plug each power connector to the appropriate pin on the Smart Controller circuit board. See Figure 26.

CAUTION! Verify wiring from the terminals to circuit board are correct before applying power to the control. 24V power must not be applied to the 2.5 VAC terminals. Connecting 24V to the 2.5 VAC connection on the circuit board will damage the circuit board.

NOTE	**The wire connectors must be connected to the circuit board properly. The wires must exit the plug-in connector opposite of the raised white base of the circuit board connector. Failure to properly connect any of the connectors will result in a malfunction of the circuit board operation.**

13. Connect the other end of the power cord, with the spade terminals, to the two 2.5VAC terminals on the transformer. See Figure 26.
14. Insert the Aqua-Sensor sensor probe wire harness through the Auqa-Sensor connector opening at location #3 on the controller enclosure. See Figure 21.
15. Tighten the nut on the interior side of the port opening on the controller enclosure. See Figure 23.
16. Connect the Aqua-Sensor probe wire harness bushing to the circuit board. The Aqua-Sensor probe terminal is labeled “Aqua-Sensor.” See Figure 26.

NOTE	**The 230 VAC transformer does not have 2.5 VAC connections. The Aqua-Sensor probe cannot be used.**

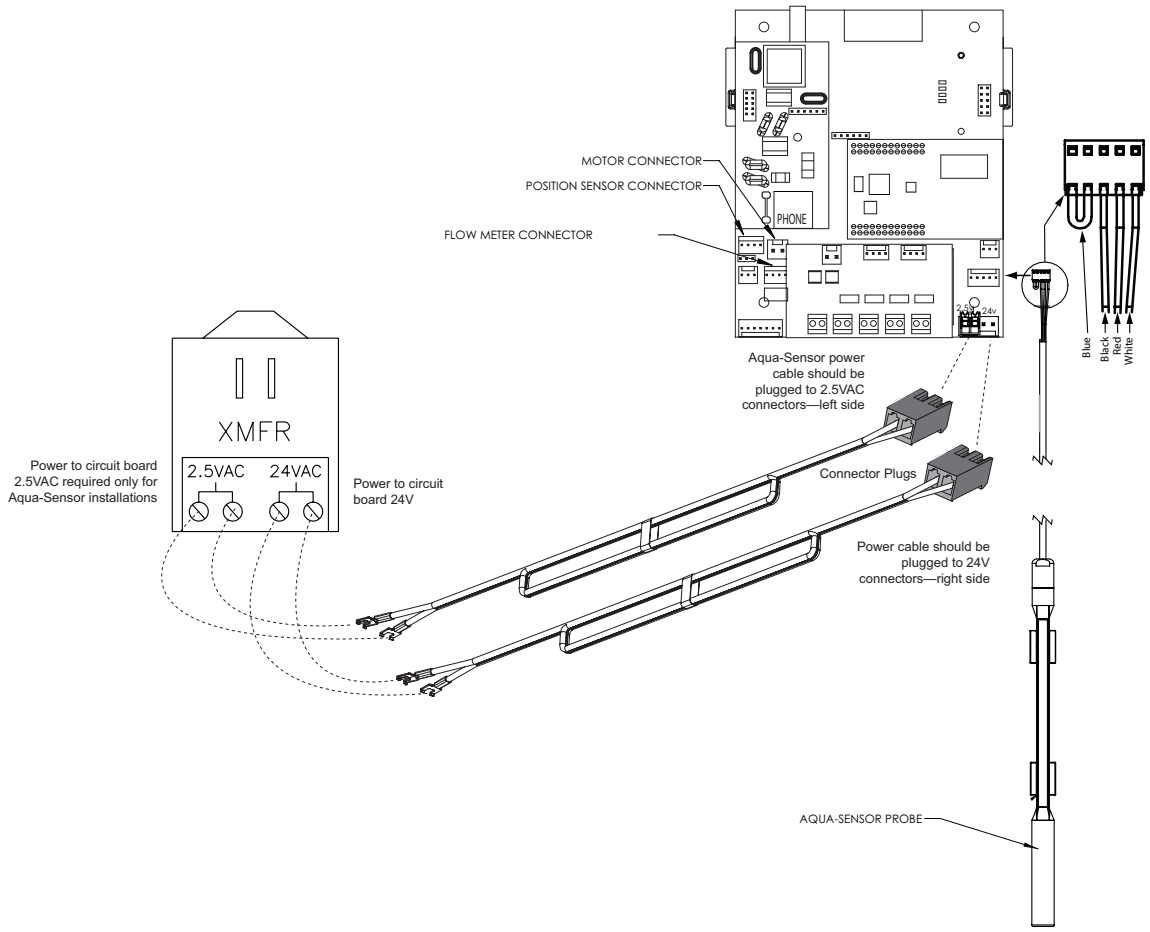

Figure 26. Transformer-circuit board power connection.

Connecting Multiple Circuit Boards to 24VAC Power Supplies

In progressive flow systems, each GBE circuit board requires electrical power. Because the GBE circuit boards are electrically connected to each other via the communication cable, it is very important to use care in properly wiring these systems to electrical power. Failure to do so can result in, at a minimum, damaging the GBE circuit boards. Culligan STRONGLY RECOMMENDS that every GBE circuit board be provided with its own individual power transformer as shown in Figure 27.

When using individual power supplies, the GBE boards can be connected to each other using communication cables without paying attention to the polarity of the wiring used on the power supplies. DO NOT connect the Aux-Outputs of multiple GBE boards to the same electrical load (for example, a “load” can be the coils of a relay or a solenoid valve). If you need the Aux Outputs of multiple GBE boards to run the same load; it is required that you use isolation relays as shown in Figure 28.

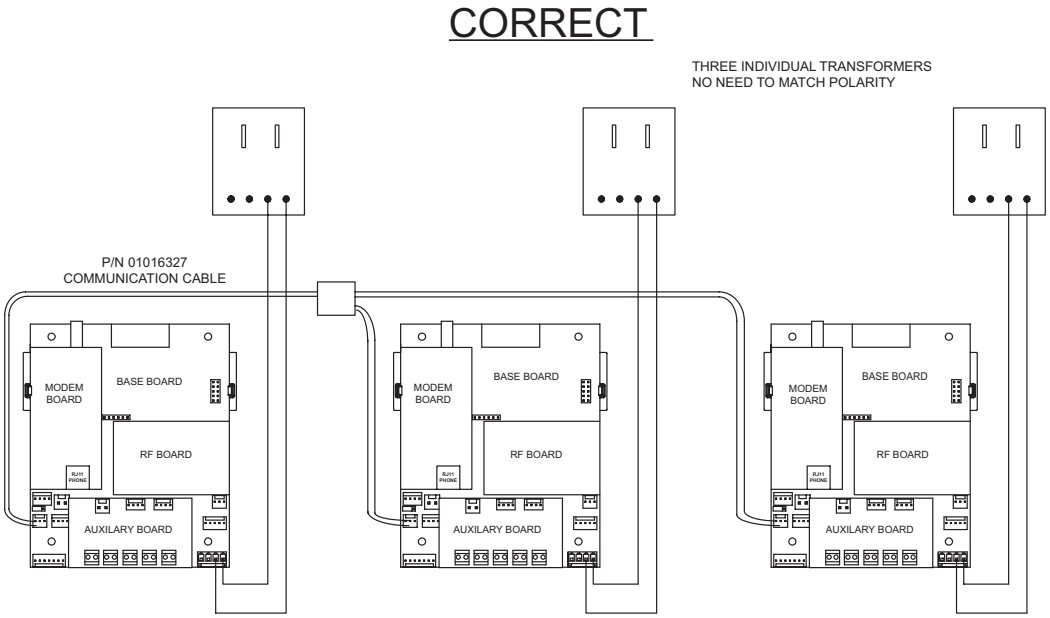

Figure 27. Correct connections for multiple GBE boards to individual 24VAC power supplies.

CORRECT

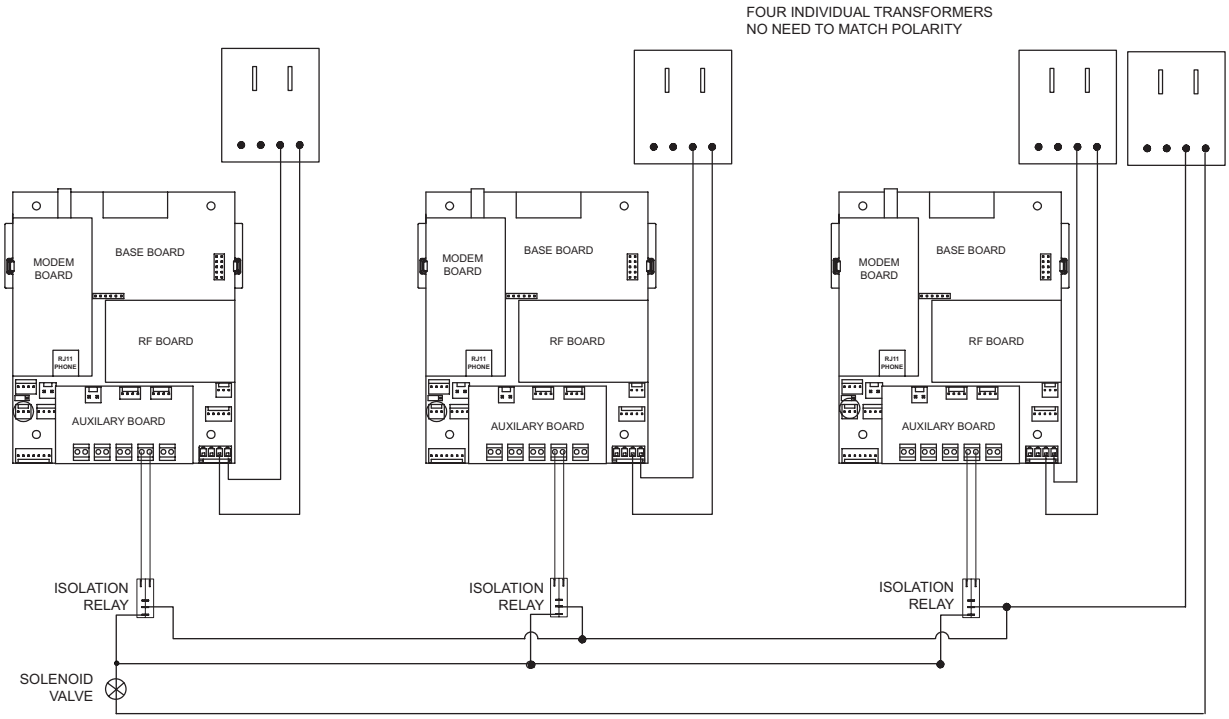

Figure 28. Use of isolation relays to allow multiple GBE boards to control a shared solenoid valve.

NOT RECOMMENDED

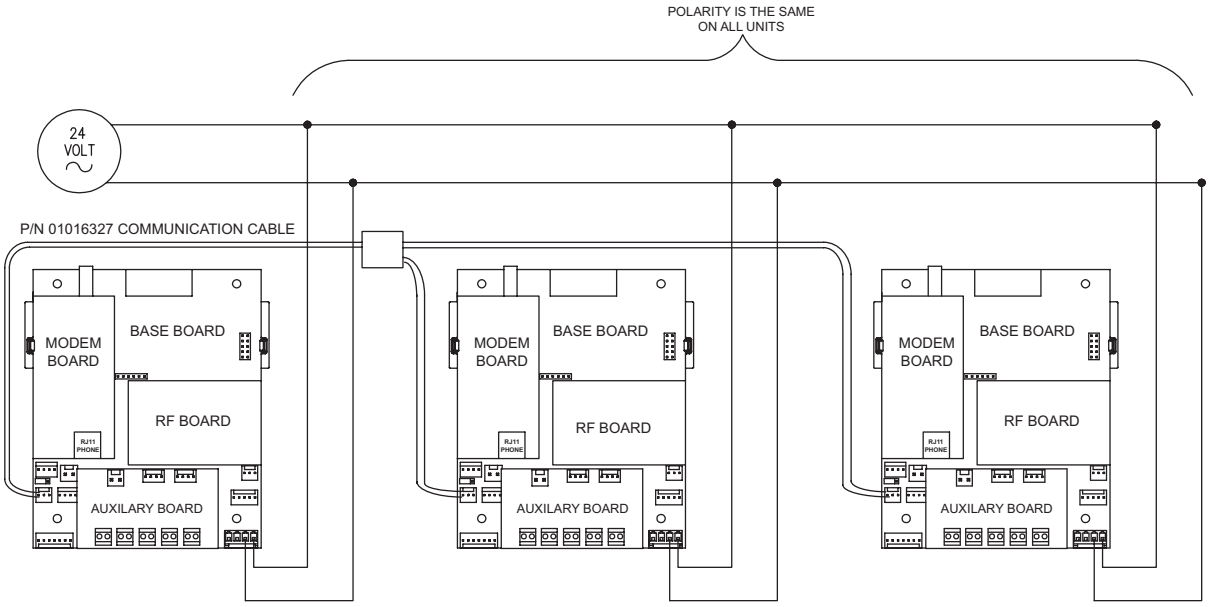

Figure 29. Not recommended connections for multiple GBE boards to shared 24VAC.

NOTE **This configuration, while correct, should be avoided, since any single polarity change will cause immediate failure of GBE boards and/or transformers.**

Returning the Circuit Board into the Enclosure

1. Angle the circuit board opposite the front enclosure and into the support bracket on the side of the enclosure.
2. Gently push down and rotate forward until you hear a click (the pins on the bottom of the enclosure being inserted into the circuit board).
3. Check to make sure the circuit board is rigidly fastened.

Reattaching Electrical Enclosure Cover to Control Valve

1. If compartment plate was never removed, skip to step 3. Align the compartment plate over the gear motor onto the control valve frame. Ensure that the gaskets on the compartment plate are positioned correctly to prevent leaks.
2. Pull the position sensor cable back through the gray rubber bushing.
3. Place the enclosure onto the control valve, aligning the circuit board edge with the slots on the control valve frame and the screw on the enclosure with the hole on the cover. See Figure 30.

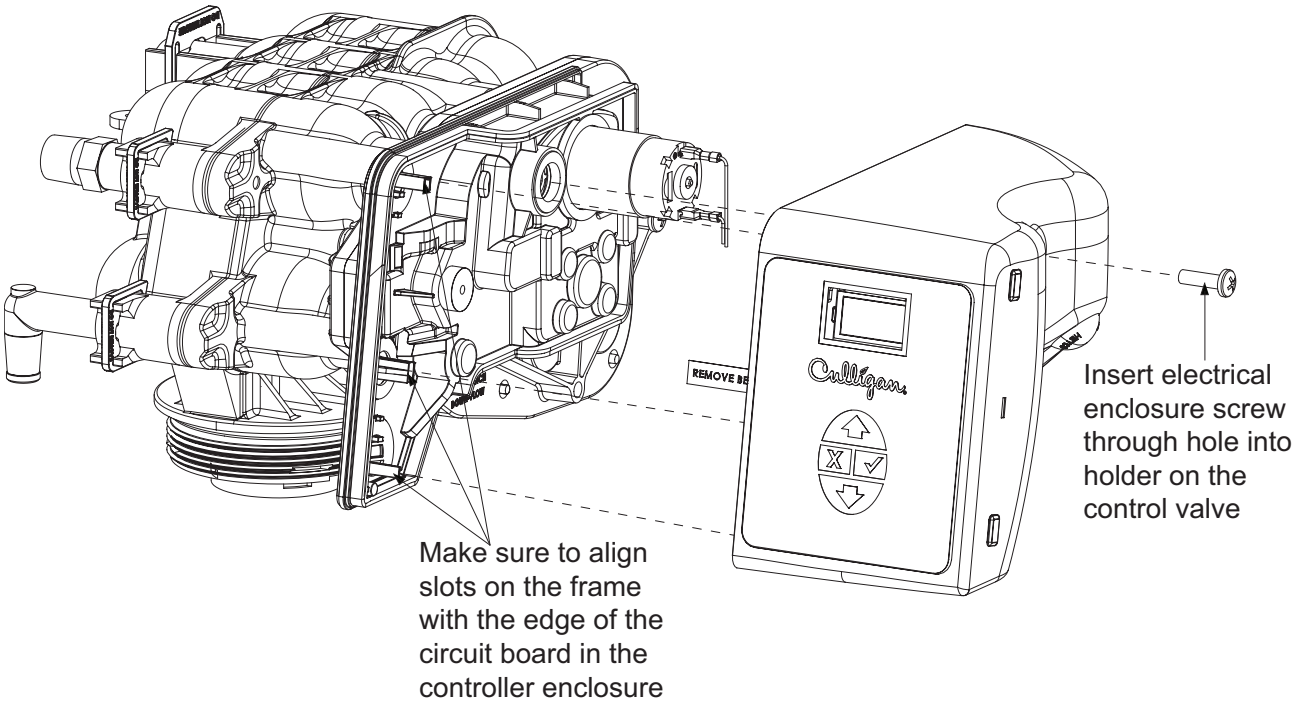

Figure 30. Attaching enclosure cover to control valve.

4. Screw the enclosure on the control.
5. Connect the 24V power cord to the two 24V terminals on the transformer.

NOTE **Refer to the GBE Programming for Commercial Softeners and Filters, except HF xN Manual (P/N 01027295) for programming information. This manual can be obtained from your local dealer, on CPort (www.cport.culligan.com) under the Technical Service Tab or on the Service Tech App.**

Smart Controller Circuit Board Layout–Front

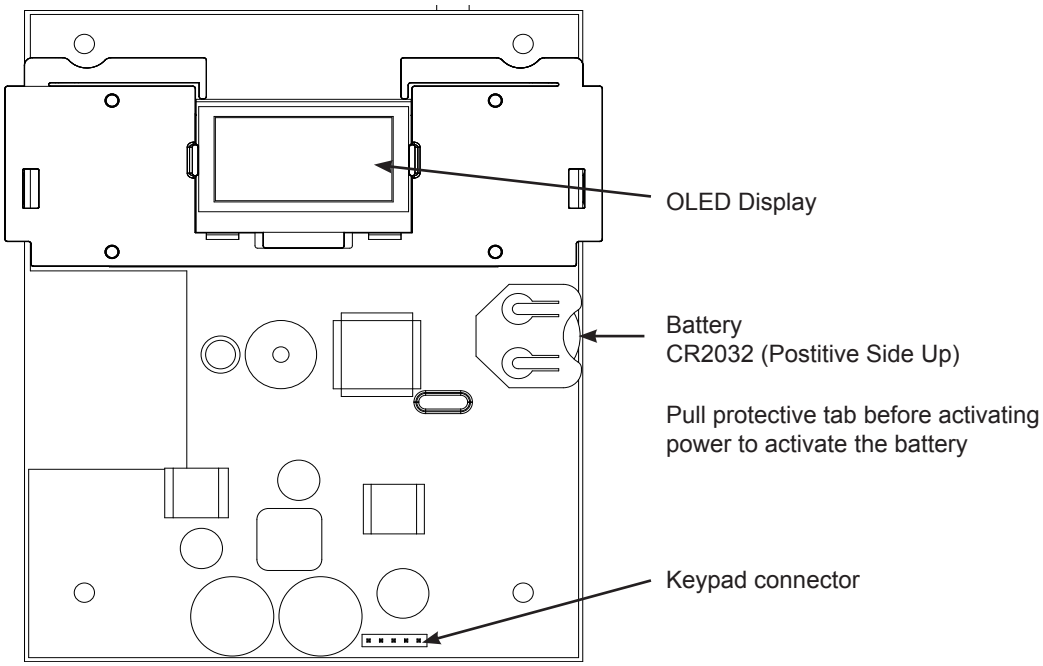

Figure 31. Smart Controller circuit board layout, front view.

Smart Controller Circuit Board Layout–Back

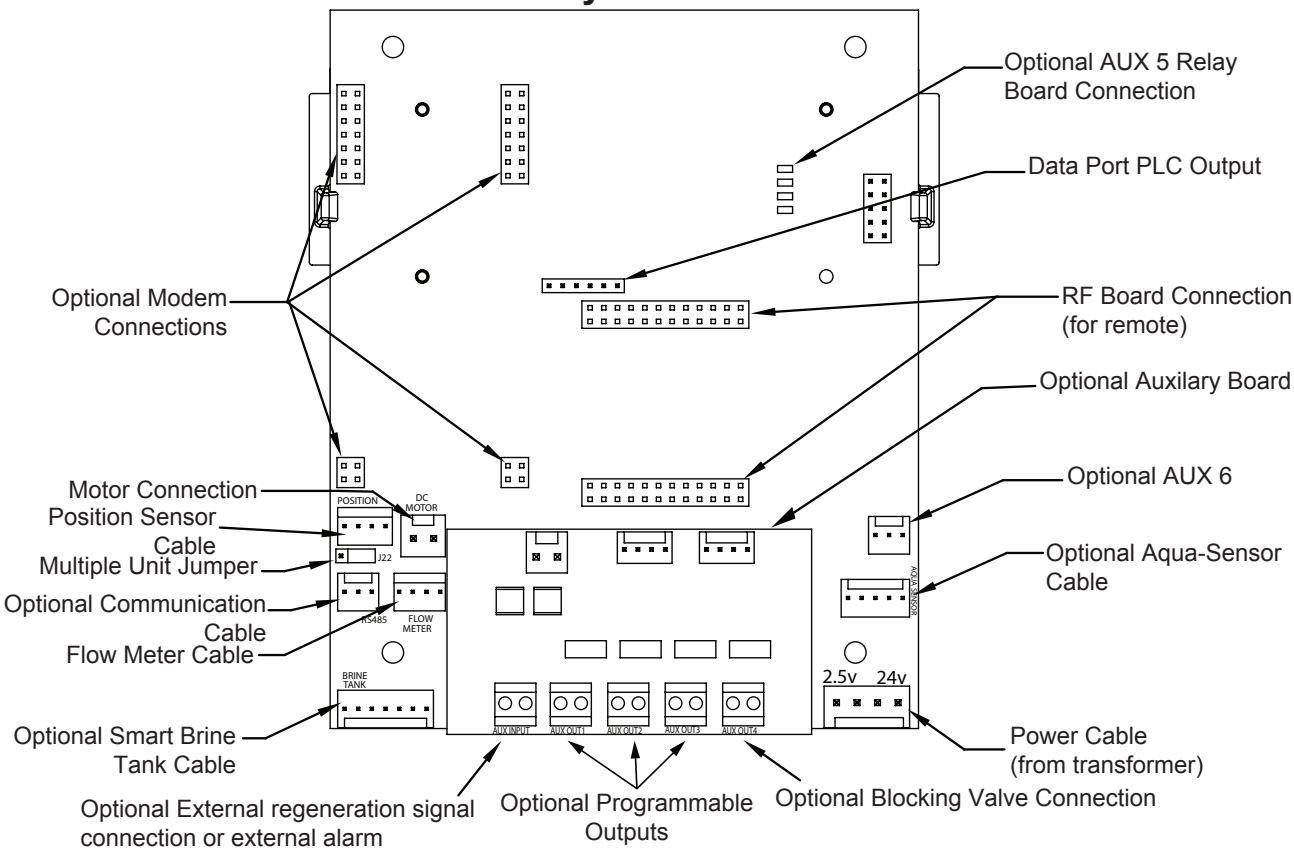

Figure 32. Smart Controller circuit board layout, rear view.

Electrical Schematic

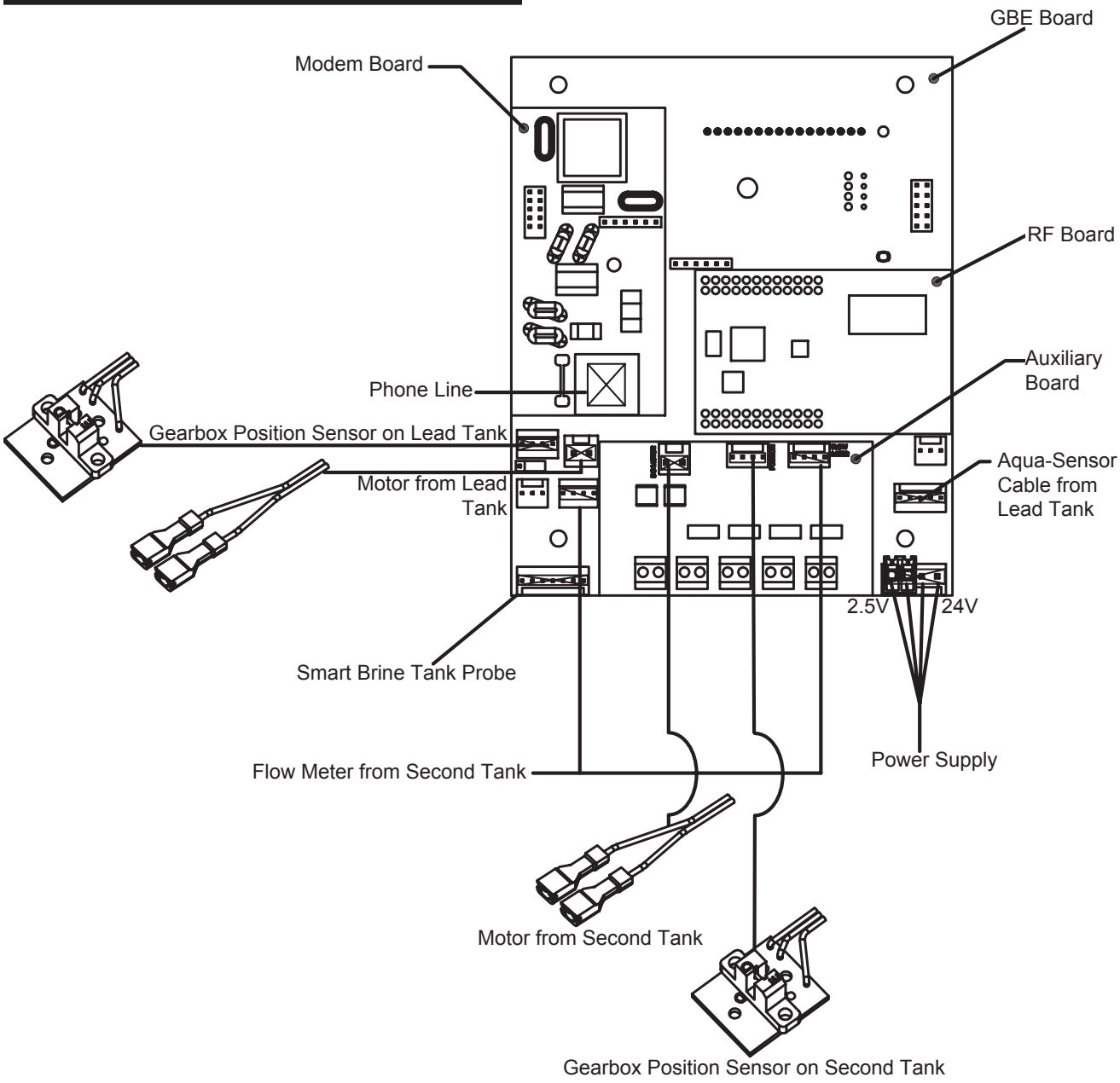

Aqua-Sensor® (P/N 01025279)

Aqua-Sensor® probe detects and initializes a regeneration based on exhaustion of the resin bed, which is monitored by electrical conductivity. The conductivity is also monitored in the resin during regeneration to determine the brining process has been complete and to optimize the slow rinse times, potentially saving water.

WARNING! For best results, do not subject the Aqua-Sensor® to conditions outside the operating parameters of the water softening system. See page 3.

Adjust the cable to the proper length for the HE tank size. The small center plug can be loosened to allow cable movement and then retightened with pliers to prevent leaks. Remove the Fillport plug by turing it a 1/4 turn and lifting up on the plug. Lube the o-ring of the Aqua-Sensor probe plug before inserting it into the port.

NOTE After installation of the Aqua-Sensor probe, a complete regeneration is required to set the probe at its proper depth, and record the conductivity in the tank. Refer to GBE Programming for Commercial Softeners and Filters (except for HFxN) Manual (P/N 01027295) for programming information. This manual can be obtained from your local dealer, CPort (www.cport.culligan.com) under the Technical Service Tab or on the Service Tech App.

NOTE Aqua-Sensor probe requires the connection of the 2.5V power cord to the transformer and circuit board. See page 20 for details.

Softener Model	HE-60	HE-90	HE-120	HE-150	HE-210
Recommended "A"	37.5"	42.6"	54.4"	52.5"	52.5"

NOTE Measurement to the bottom of the probe allows for a 30% reserve capacity.

NOTE If used in a multiple tank configuration, lower the probes to be just above the underbedding.

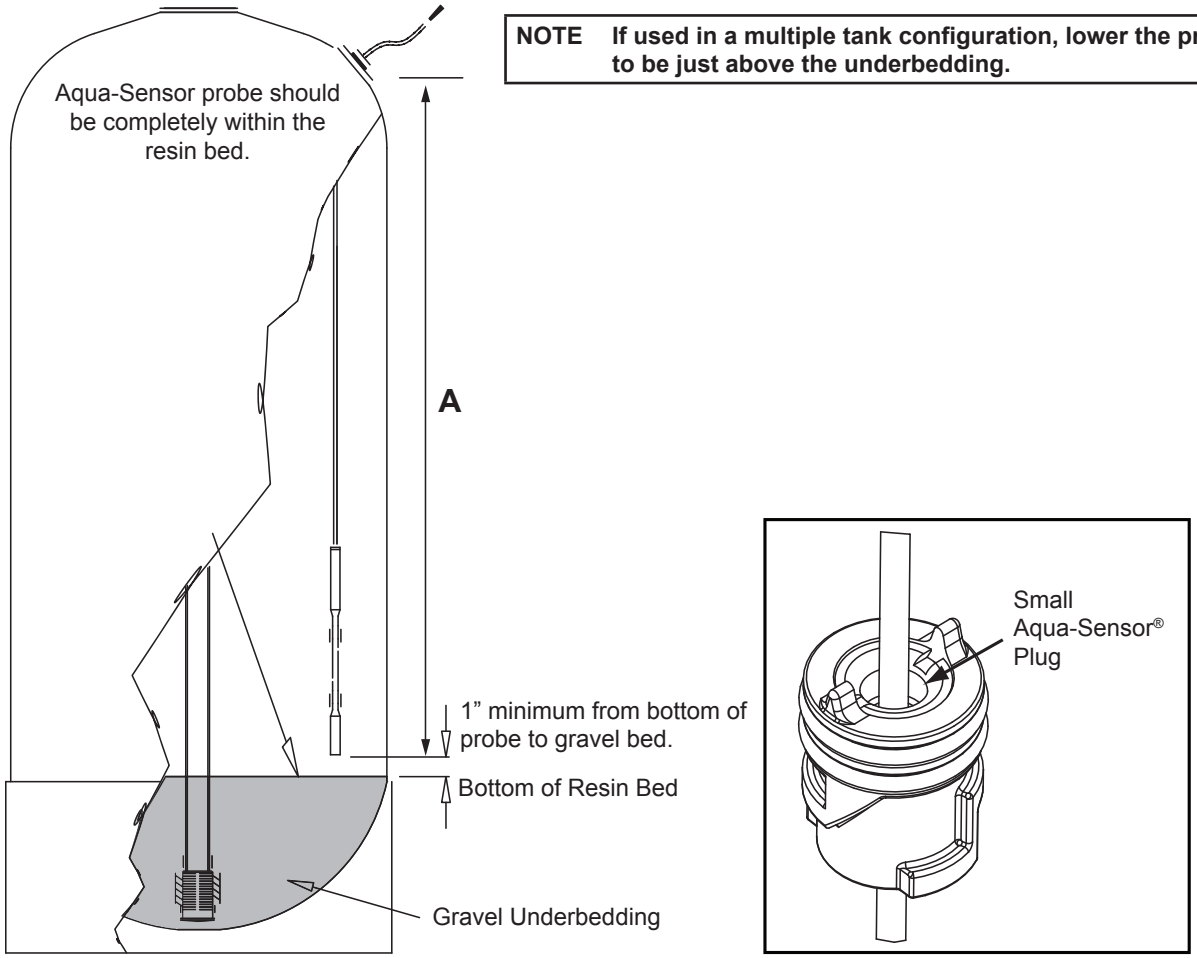

Figure 33. Aqua-Sensor® probe positioning.

Auxiliary Outputs (P/N 01020748)

The auxiliary board (Figure 34) comes in the parts pack of the HE 1.5” Twin’s secondary valve. It has four 24 VAC outputs for driving 24VAC control valve motors, energizing 24VAC relay coils, or 24VAC solenoids directly. Each solid state triac output is capable of handling up to 4 Amps maximum; HOWEVER, the 24VAC transformer determines how much total current is available. Max supply current of the 01014897 transformer is only 2.1 Amps, so the sum of all loads on the triac outputs should never exceed the maximum that the transformer can supply. The Auxiliary Outputs (see Figure 35) can be programmed to be “normally off” (output stays OFF until the designated time, it is needed to be ON) or “normally on” (output stays ON until the designated time, it is needed to be turned OFF).

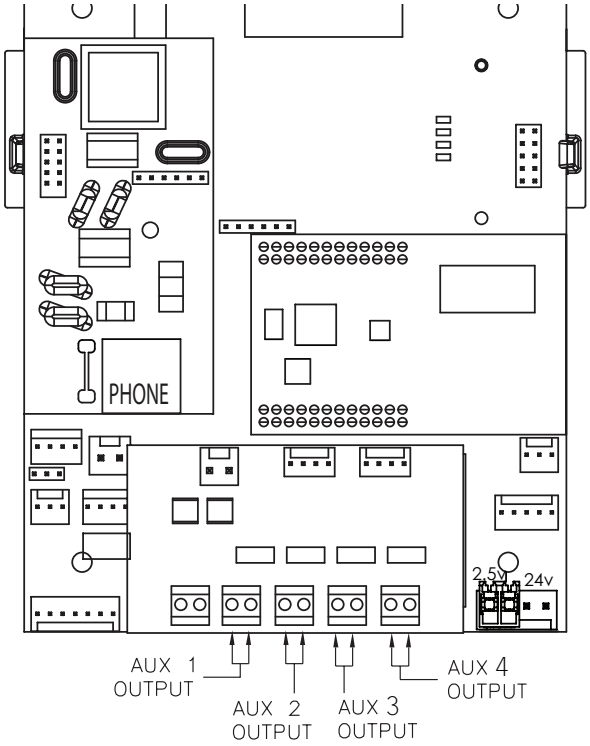

Figure 34. Auxiliary outputs.

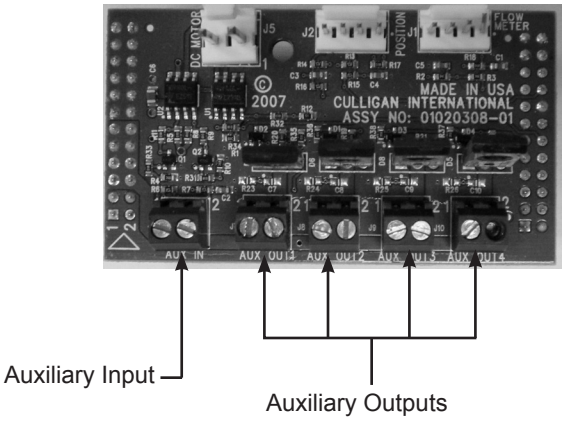

Figure 35. Auxiliary board input and outputs.

Aux Output 1 is used to power the 24 VAC drive motor found on all valves. When Aux Output 1 is used for this, then Aux Output 4 is automatically configured to operate a solenoid which can be used for a standby or blocking. Aux Output 4 is powered during all cycles except service, and unpowered during service.

For example, Figure 36 shows how the timing would work if an auxiliary output is set to NORMALLY OFF. The cycle position is set to BACKWASH, the delay minutes setting is greater than zero, and ON minutes is greater than zero.

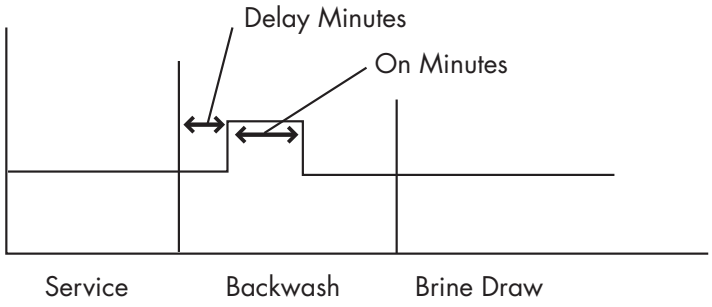

Figure 36. Auxiliary board activation timing.

Refer to GBE Programming for Commercial Softeners and Filters (except for HFxN) Manual (P/N 01027295) for programming information. This manual can be obtained from your local dealer, CPort (www.cport.culligan.com) under the Technical Service Tab or on the Service Tech App.

Auxiliary Output 5 Relay Board (P/N 01022238)

The GBE board offers support for the Auxiliary Output 5 Relay board (P/N 01022238). To use the relay board, install it onto the back of the GBE board.

Refer to GBE Programming for Commercial Softeners and Filters (except for HFxN) Manual (P/N 01027295) for programming information. This manual can be obtained from your local dealer, CPort (www.cport.culligan.com) under the Technical Service Tab or on the Service Tech App.

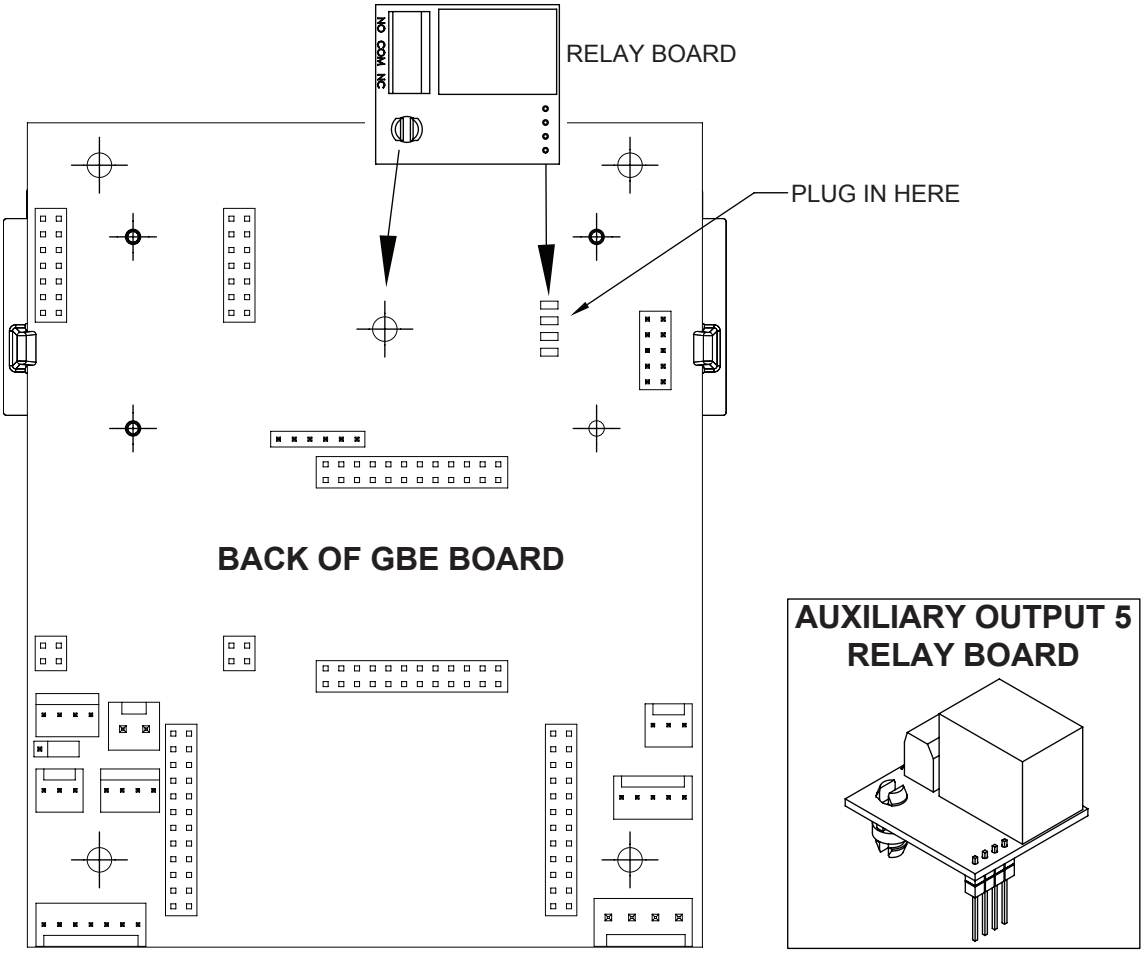

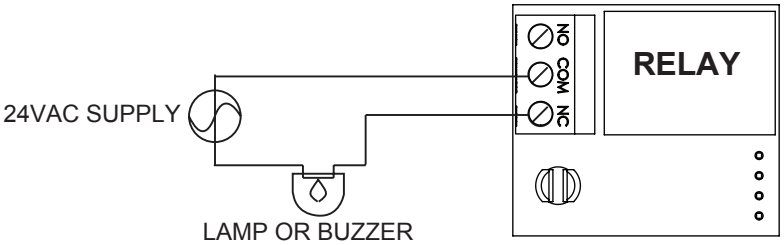

In this example, the circuit is wired to the Common (Com) Terminal and Normally Closed (NC) Terminal, which means that when the light is ON an error has occurred,and when the light is OFF the circuit is operating normally.

Figure 37. Example of customer wiring to the GBE Alarm Signal Output.

This mode of operation occurs when the relay board is plugged into the GBE board chlorinator socket. When Error Status is selected on the display, this relay is energized holding the normally closed contact open, and when the GBE board has power AND there are no errors present the relay is energized. (“Problem Found” is not showing on the Home screen). The relay is in the de-energized state when the GBE is either powered OFF or when there is an error present on the GBE board.

On a multiple-tank softener system, such as a twin-alternating, or progressive flow network, the Alarm Signal Output Relay board must be installed on each Smart Controller that the user wants monitored for errors.

Installing the Wireless Remote (P/N 01020553)

1. Select a location for the wireless remote monitor (Figure 38). The location must be near an electrical outlet. If a modem is used in the remote, then the location should also be near a standard RJ-11 type telephone wall jack.

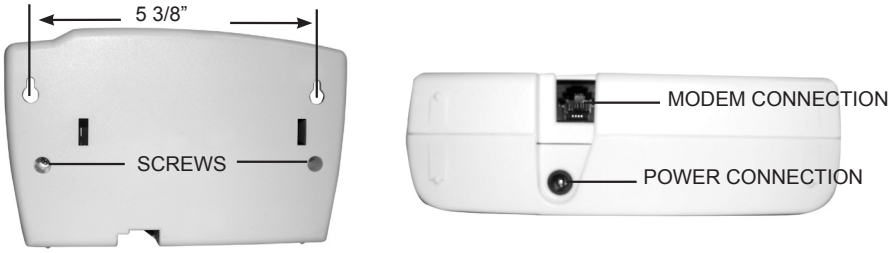

Figure 38. Wireless remote monitor.

⚠	**CAUTION! Do not touch any surfaces of the circuit board. Electrical static discharges may cause damage to the board. Handle the circuit board by holding only the edges of the circuit board. Keep replacement boards in their special anti-static bags until ready for use. Mishandling of the circuit board will void the warranty.**

2. (Optional) If a modem is to be installed into the remote monitor, refer to “Installing the Modem In the Remote” on page 32 for installation and setup.
3. Connect the power cord to the bottom of the remote monitor. If a modem is to be used in the remote, plug a standard telephone extension cord into the bottom of the remote monitor. Plug into 120V outlet.
4. Disconnect power to the softener. Open the control.

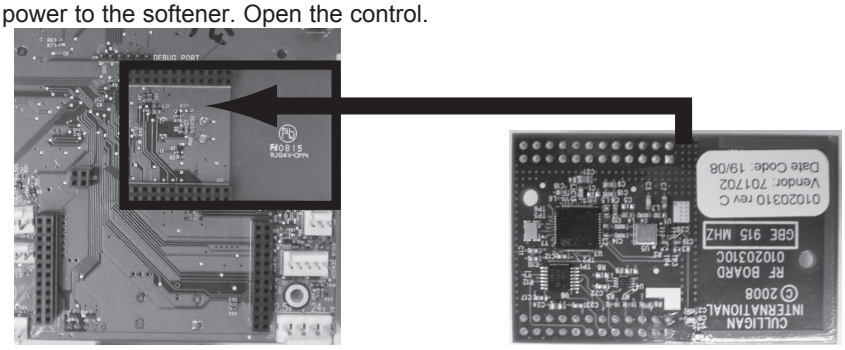

Back of GBE Board RF Board (note orientation)

Figure 39. RF board location on Smart Controller board.

5. Install RF board into unit controller. Line up pins in RF board and press firmly into black connectors. Note orientation of RF board (see Figure 39). Make sure the RF board is fully seated into all of the sockets. Reconnect power.
6. Program the remote and main monitor units using the instructions found in the GBE Programming for Commercial Softeners and Filters (except for HFxN) Manual (P/N 01027295). This manual can be obtained from your local dealer, Cport (www.cport.culligan.com) under the Technical Service Tab or the Service Tech App.
7. Place the remote monitor against the wall in the selected location, then check the signal strength. Refer to the GBE Programming for Commercial Softeners and Filters (except for HFxN) Manual (P/N 01027295) for instructions.
8. Use the Hole Drilling Template (Figure 38) as a guide to drilling two holes to mount the remote monitor. If drilling into wall board, drill two 5/16” diameter holes and insert the plastic drywall anchors into the holes securing them with the two #10 screws provided. If drilling into a solid surface, drill two 7/32” holes into the surface and screw the two #10 screws into the holes. In either case, leave a gap of approximately 3/32” between the head of the screw and the wall. Hang the remote monitor on the two screws.

Smart Brine Tank Probe (P/N 01027289)

The Smart Brine Tank Probe Kit is not designed to work in a brine system taller than 40”. Refer to the Smart Brine Tank (SBT) Probe Kit Manual (01026800) for installation instructions and the GBE Programming for Commercial Softeners and Filters (except for HFxN) Manual (01027295) for programming instructions. This manual can be obtained from your local dealer, CPort (www.cport.culligan.com) under the Technical Service Tab or on the Service Tech App.

Modem

NOTE **The modem can be installed into either the back of the main controller or the back of the remote control board. The functionality of the modem is the same in either installation.**

1. Unplug the wireless remote before installing the modem into the back of the GBE board or the back of the remote. See Figure 40 and Figure 41.

WARNING! **Disconnect all electrical power to the unit before servicing. Bypass the unit and relieve system pressure before attempting repair.**

CAUTION! **Grip all connections to the circuit board by the connecting terminals for assembly and disassembly. Failure to do so could result in damage to the wire leads or connecting terminals.**

CAUTION! **Do not touch any surfaces of the circuit board. Electrical static discharges may cause damage to the board. Handle the circuit board by holding only the edges of the circuit board. Keep replacement boards in their special anti-static bags until ready for use. Mishandling of the circuit board will void the warranty.**

2. Make sure all of the pins at all four connectors are aligned between the modem board and the main controller board. Make sure that the modem board is fully seated into all four sockets.
3. When all connections have been made restore power.
4. Connect the modem to the telephone line by plugging a standard RJ-11 phone extension cord into the modem board.

NOTE **The HE 1.5 Twin is designed to plug into an analog telephone line (standard residential phone line). This includes phone lines connected to most residential VoIP (voice over Internet) phone systems and to residential DSL phone systems. If you are connecting the HE to a DSL phone system, follow the DSL provider recommended method to connect standard phones to the DSL service. Many systems recommend or require the use of DSL line filters between the phone jack and the device.**

NOTE **Try to place the HE 1.5 Twin Softener or Remote Display near a telephone jack. A splitter might be needed if the jack is already in use.**

Installing the Modem in the GBE Board

Open the controller cover and locate the modem connection on the back of the board (see Figure 40). Insert line modem board (part number 01020747) into the socket on the back of the board. Make sure that all of the pins in all four connectors are aligned and make sure the modem is fully seated into all of the sockets.

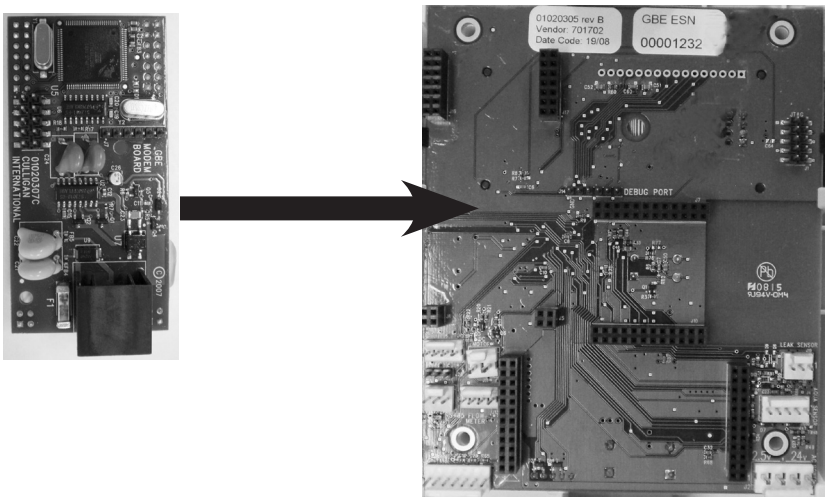

Figure 40. Back of GBE board.

Installing the Modem In the Remote

Open the remote monitor housing by removing the two screws and squeezing the sides of the monitor housing slightly. Insert the modem board (P/N 01020747) into the socket on the back of the remote board (see Figure 41). Make sure that all of the pins in all four connectors are aligned and make sure the modem is fully seated into all of the sockets. Snap the two halves of the remote housing back together using light finger pressure and insert the two screws.

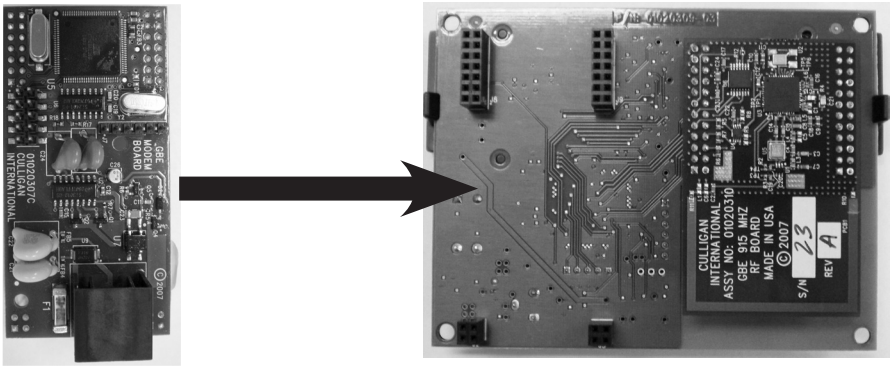

Figure 41. Back of remote board.

Refer to the GBE Programming for Commercial Softeners and Filters, except HF xN Manual (P/N 01027295) for programming information. This manual can be obtained from your local dealer, on CPort (www.cport.culligan.com) under the Technical Service Tab or on the Service Tech App.

Flow Meter

See the "Electrical Schematic" on page 26 for information regarding the flow meter connections.

Refer to the GBE Programming for Commercial Softeners and Filters, except HF xN Manual (P/N 01027295) for programming information. This manual can be obtained from your local dealer, on CPort (www.cport.culligan.com) under the Technical Service Tab or on the Service Tech App.

Recommended Start-Up Procedure

1. Close the main water supply valve.
2. Ensure that all faucets at the installation site are closed.
3. Direct the drain line discharge into a bucket where flow can be observed.
4. Plug the transformer into a 120 Volt, 60 Hz, single-phase receptacle. The screen displays **FIRST TIME SETUP** (see the GBE Programming for Commerical Softeners and Filters, except for HF xN Manual (P/N 01027295)).

NOTE **This manual can be obtained from your local dealer, on CPort (www.cport.culligan.com) under the Technical Service Tab or on the Service Tech App.**

5. Complete the First Time Setup.
6. Open the main supply valve.
7. Initiate an immediate regeneration to move the control into the **BACKWASH** position.
8. Refer to the section on manual cycling for information on cycling the control through its positions.
9. When in the **BACKWASH** position, slowly rotate the bypass (if installed) to the soft water position until water flows.
10. Allow the tank to fill slowly until water flows from the drain line.
11. When flow to drain is established, open the bypass (if installed) fully. Watch the drain line discharge for signs of resin. If signs of resin particles appear, reduce the flow. Increase the flow again when resin no longer appears in the discharge.
12. After the **BACKWASH** runs clear for at least 20 minutes (required for final startup only, backwash can be changed to a shorter time for regular service), step the control to the **REFILL** position to fill the brine tank and purge air from the brine line.
13. Complete the installation and cleanup.
14. Sanitize the unit as you leave the installation site (See page 37).
15. Initiate an immediate regeneration, or set to regenerate at the preset time.

Fill the Salt Storage Container

Before filling the brine tank with salt, add water until it is visible at the salt plate level. Then refer to Table 7 and Table 8 to find the regeneration capacity based on the chosen salt dosage.

The following terms will be helpful to know:

- Max. Salt Fill, lbs - This value is the maximum number of pounds of salt that can be put into the brine tank. This may be less than the total capacity depending on whether there is wet or dry storage (see definitions below).
- No. of Regens - This is the number of softener sytems regenerations that can be obtained from the maximum salt fill.
- Wet or Dry - This column will note whether wet or dry storage is required
- Dry Storage - When enough salt is added to the brine tank, so that the salt level is higher than the water level. When the proper amount of water is returned to the salt storage tank during brine refill (see Figure 42).
- Wet Storage - When the salt level has to remain lower than the water level after refill to prevent the displacement of the volume of water required for salt dosages of 12 lb/ft³ or greater. (see Figure 43).

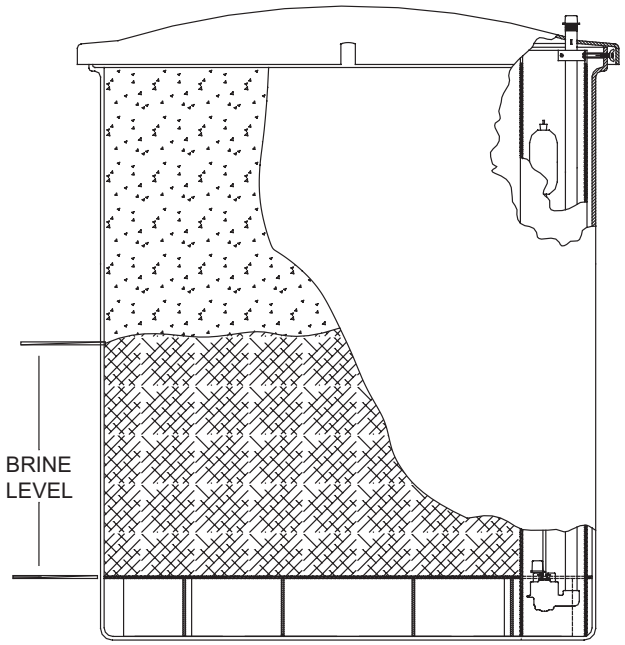

Figure 42. Dry storage.

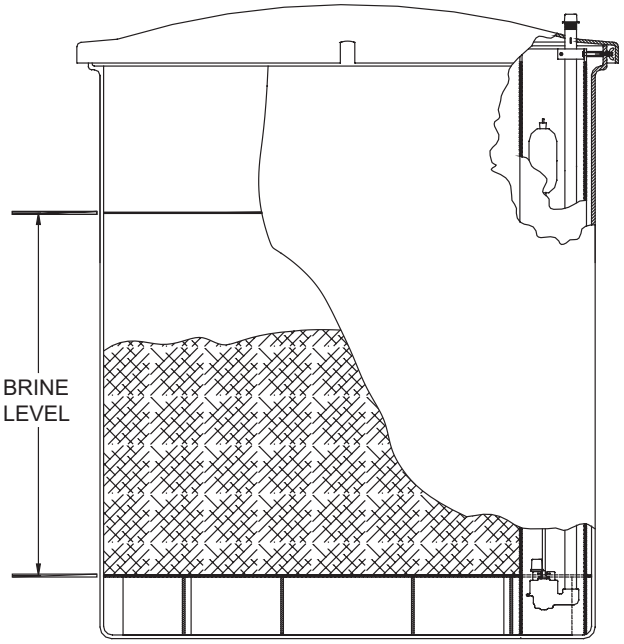

Figure 43. Wet storage.

Table 7. High Efficiency 1.5 Twin brinemaker data, 1/2” valves.

		1/2" Brine Valve Size					
		18		24x40		24x50	
Cubic feet	Soft Tank Dia	Total lbs.	lbs/ft³	Total lbs.	lbs/ft³	Total lbs.	lbs/ft³
2	14	34.7	17.4	61.7	30.9	61.7	30.9
3	16	34.7	11.6	61.7	20.6	61.7	20.6
4	16	34.7	8.7	61.7	15.4	61.7	15.4
5	18	34.7	6.9	61.7	12.3	61.7	12.3
7	21	NA	NA	61.7	8.8	61.7	8.8

Chart shows max salt dosage for dry storage in total lbs and lbs/ft³

To use Table 8 locate the resin volume of the softener model along the left side of the table. Select a 6, 10 or 15 pound/cubic foot of resin salt dosage amount. Continue reading the table to the right until you find a brine system that provides the salt storage characteristics desired. Refer to the key at the bottom of the chart for information concerning the shaded areas of this table

Table 8. High Efficiency 1.5 Twin brine tank data, 1/2” valves.

		1/2" Brine Valve Size					
Mineral Tank	Brine Dia	18		24x40		24x50	
	Max Load lbs	375		600		900	
Cubic Feet	lbs/ft³	Max Load	# regens	Max Load	# regens	Max Load	# regens
2	6	375	31.3	600	50	900	75
	10	375	18.8	600	30	900	45
	15	375	12.5	600	20	900	30
3	6	375	20.8	600	33.3	900	50
	10	375	12.5	600	20	900	30
	15	267	5.9	600	13.3	900	20
4	6	375	15.6	600	25	900	37.5
	10	292	7.3	600	15	900	22.5
	15	193	3.2	600	10	900	15
5	6	375	12.5	600	20	900	30
	10	243	4.9	600	12	900	18
	15	119	1.6	500	6.7	500	6.7
7	6	282	6.7	600	14.3	900	21.4
	10	144	2.1	524	7.5	524	7.5
	15			352	3.4	352	3.4
XXX	= wet storage (for more information regarding wet storage, see page 34)						
	= brine system or dosage not recommended for softener						

Key for Table 9 on the Next Page

Column Name	Description
lbs/ft³	= Salt Usage
Dos.	= Salt Dosage
Cap.	= Capacity
XXX	= wet storage (for more information regarding wet storage, see page 34)

Table 9. High Efficiency 1.5 Twin Refill Minutes/Salt Dosage/Capacity

Resin Vol (ft³)	2			3			4			5			7		
Refill flow Restricted to (gpm)	0.8														
Resin Tank Dia. (in.)	14			16			16			18			21		
Refill Min	lbs/ft³	Dosage	Capacity	lbs/ft³	Dosage	Capacity	lbs/ft³	Dosage	Capacity	lbs/ft³	Dosage	Capacity	lbs/ft³	Dosage	Capacity
3	3.6	7.2		2.4	7.2		1.8	7.2		1.4	7.2		1.0	7.2	
4	4.8	9.6		3.2	9.6		2.4	9.6		1.9	9.6		1.4	9.6	
5	6	12	40,000	4	12		3	12		2.4	12		1.7	12	
6	7.2	14.4		4.8	14.4		3.6	14.4		2.9	14.4		2.1	14.4	
7	8.4	16.8		5.6	16.8		4.2	16.8		3.4	16.8		2.4	16.8	
8	9.6	19.2		6.4	19.2	60,000	4.8	19.2		3.8	19.2		2.7	19.2	
9	10.8	21.6	50,000	7.2	21.6		5.4	21.6		4.3	21.6		3.1	21.6	
10	12	24		8	24		6	24	80,000	4.8	24		3.4	24	
11	13.2	26.4		8.8	26.4		6.6	26.4		5.3	26.4		3.8	26.4	
12	14.4	28.8		9.6	28.8		7.2	28.8		5.8	28.8		4.1	28.8	
13	15.6	31.2	60,000	10.4	31.2	75,000	7.8	31.2		6.2	31.2	100,000	4.5	31.2	
14				11.2	33.6		8.4	33.6		6.7	33.6		4.8	33.6	
15				12	36		9	36		7.2	36		5.1	36	
16				12.8	38.4		9.6	38.4		7.7	38.4		5.5	38.4	
17				13.6	40.8		10.2	40.8	100,000	8.2	40.8		5.8	40.8	
18				14.4	43.2		10.8	43.2		8.6	43.2		6.2	43.2	140,000
19				15.2	45.6	90,000	11.4	45.6		9.1	45.6		6.5	45.6	
20							12	48		9.6	48		6.9	48	
21							12.6	50.4		10.1	50.4	125,000	7.2	50.4	
22							13.2	52.8		10.6	52.8		7.5	52.8	
23							13.8	55.2		11.0	55.2		7.9	55.2	
24							14.4	57.6		11.5	57.6		8.2	57.6	
25							15	60	120,000	12.0	60		8.6	60	
26										12.5	62.4		8.9	62.4	
27										13.0	64.8		9.3	64.8	
28										13.4	67.2		9.6	67.2	
29										13.9	69.6		9.9	69.6	
30										14.4	72		10.3	72	175,000
31										14.9	74.4		10.6	74.4	
32										15.4	76.8	150,000	11.0	76.8	
33													11.3	79.2	
34													11.7	81.6	
35													12.0	84	
36													12.3	86.4	
37													12.7	88.8	
38													13.0	91.2	
39													13.4	93.6	
40													13.7	96	
42													14.4	100.8	
43													14.7	103.2	
44													15.1	105.6	210,000

Initial Backwash of the System

1. Referencing the instructions in the GBE Programming for Commerical Softeners and Filters, except for HF xN Manual (P/N 01027295), cycle the control to the backwash position.
2. Cycle the control through the remaining steps and back to the home (service) position.

Installation Wrap Up

"High Efficiency Twin 1.5 Water Softeners—Flow Rate Data (gpm)" on page 66 provides the expected flow rates to the drain during the various steps of the regeneration process.

Creating Brine

Once salt has been added to the brine tank the control valve must be manually cycled to the brine refill cycle to create the required amount of brine for the unit's first regeneration. Allow the valve to refill for the cycle #5 programmed time.

NOTE	**If the control valve is not cycled to the brine refill cycle there will be no brine for regeneration.**

NOTE	**The salt level must be checked frequently; in some cases, after each regeneration. After the brine refill step is finished, add salt. To ensure complete brine saturation in wet storage, maintain a salt depth of at least 18 inches.**

NOTE	**Use the Table 9 on page 36 and the GBE Programming for Commercial Softeners and Filters (except for HFxN) Manual (P/N 01027295) to set the HE 1.5" Twin Softener to the proper time for refilling the brine tank with water.**

Sanitize the System

A water softener in daily use on a potable water supply generally requires no special attention other than keeping the salt tank filled. Occasionally, however, a unit may require sanitization under one of the following conditions:

- At start-up time.
- After standing idle for a week or more.
- On private supplies, the appearance of off-tastes and odors, particularly if musty or "rotten egg" (caused by harmless sulfate-reducing bacteria).

NOTE	**If the water supply contains iron, regenerate the softener before sanitizing to remove iron from the resin.**

⚠	**CAUTION!** **Hazard from toxic fumes! Chlorine bleach and common iron control chemicals may generate toxic fumes when mixed.** **If the unit uses Culligan® Sofner-gard® or other compounds containing sodium hydrosulfate, sodium bisulfate, or any other reducing agent, disconnect the device feeding the chemical(s) and manually regenerate the unit before sanitizing.** **Do not use this procedure if the softener salt contains iron control additives.**

1. Remove the brine tank cover.
2. Pour directly into the brine chamber one-cup of common household bleach (5.25% sodium hypochlorite) for each cubic foot of resin in the tank.
3. Manually start recharge. Allow the unit to complete the recharge cycle automatically.

NOTE	**If tastes and odors return frequently, even after sanitization, a continuous chlorination system may be needed. Send a water sample to a qualified laboratory for bacterial analysis.**

Before Leaving the Installation Site

Once you have completed the installation the system is ready to be placed in service. Prior to placing the system in service review the following checklist to be sure the system is properly installed.

Check List

√ The media tank(s) has been properly loaded with gravel and media.

√ The drain line has been properly installed.

√ All option kits have been properly installed.

√ The system has been properly piped and tubed.

√ Each media tank has been backwashed manually.

√ The GBE controller(s) have been correctly and completely wired, including differential pressure switches if equipped.

√ All GBE controllers have been properly programmed and are active (power on).

√ All manual isolation valves are open and system by-pass valves are closed.

√ Clean up the unit and the installation site, removing any soldering or pipe threading residues from the equipment with a damp towel.

√ Explain the operation of the system to the customer.

Care and Cleaning

Protect the operation and appearance of the water conditioner by following these precautions:

1. Do not place heavy objects on top of the conditioner cover.
2. Use only mild soap and warm water to clean the exterior of the unit. Never use harsh abrasive cleaners or compounds which contain acid or bleach. Culligan recommends Simple Green or an equivalent cleaner.
3. Protect the conditioner and drain line from freezing temperatures.
4. Reset the time, if required, after any interruption of electrical power to keep the unit on its normal schedule.

Suggested Preventive Maintenance Inspection Schedule

The Culligan HE 1.5 Twin commercial water softener has been designed to provide a good, consistent service life. Routinely inspecting the system may help avoid potentially costly breakdowns related to circumstances outside of the control of the dealer and/or user.

Table 10.

Component	Suggested Inspection Frequency	Reason for Maintenance
Entire System	At Startup, after infrequent use (idle for one week or more) or every 3–6 months if on a private water supply.	On private supplies, the appearance of off-tastes and odors, particularly if musty or “rotten egg” (caused by harmless sulfate-reducing bacteria) may indicate a need for the system to be sanitized. See “Sanitize the System” on page 37.
Backwash Flow Controller	Every 12 months or every time service is performed on the system.	Build up of sediment, iron and/or other foreign materials (found in some water supplies but not necessarily all) could negatively affect system performance.Monitor item for normal (or unexpected) wear.
HE 1.5 Valve	Every 6–12 months or every time service is performed on the system.	Build up of sediment, iron and/or other foreign materials (found in some water supplies but not necessarily all) could negatively affect system performance.Monitor item for normal (or unexpected) wear.
Softening Media	Every 2–3 years	Chlorinated water supplies can break-down/destroy resin material. Resin material may also perform poorly if subjected to other materials (sediment, iron, alum, etc) found in some water supplies (but not necessarily all).

Application Problems

Many service problems are not due to equipment malfunction, but rather to misapplication or environmental conditions.

The “Performance Specifications” on page 3 provide the limits of water characteristics for the HE 1.5 water softeners. If the water characteristics fall outside these limits, additional water treatment equipment may be required, or the water characteristics should be brought inside the limits. The system flow rates and exchange capacities are also listed.

Flow Rates—the backwash, brine, and slow rinse flows should not differ from those in “High Efficiency Twin 1.5 Water Softeners—Flow Rate Data (gpm)” on page 66 by more than 15 percent.

Refill Minutes/Salt Dosage/Capacity shows the hardness removal capabilities for each unit as a function of salt dosage and refill time. Multiply the inlet hardness times the maximum daily water usage to determine the daily capacity requirement. If the hardness or water usage has increased, a higher salt dosage, more frequent regeneration, or a larger softener may be needed. See Table 9 on page 36.

If there are no apparent general problems or environmental problems, refer to “General Troubleshooting” on page 46.

Maintenance

Analyze the System

Analyzing the problem involves three basic steps:

1. Check the system in all cycle positions.
2. Compare the data to normal operating data.
3. Determine which component may cause the problem (troubleshooting).
4. If steps 1-3 did not reveal the problem, initiate a regeneration cycle and manually cycle the valve to brine draw (#2 position). Allow the unit to complete the brine draw cycle and observe how the system reacts.

Although it may be possible to solve a specific problem simply by changing a component, analyzing the entire system can reveal additional problems which would otherwise require extra service calls. Changing parts is not the same as service.

Check the System

The following tools are needed to collect data:

1. Hardness, iron and chlorine test kits
2. Thermometer
3. Pressure gauge, 0-120 psi
4. 5-gallon bucket and watch
5. Calculator

The customer can provide most data. By collecting data prior to a service call, a first guess about the cause of the problem can be made and the need for any special parts can be determined. If the problem is as simple as lack of salt in the brine tank, a service call may not be needed at all. A recommended system data sheet can assist the troubleshooting process. See the GBE Programming for Commercial Softeners and Filters, except HF xN Manual (P/N 01027295) for instructions on how to obtain a system data sheet.

NOTE **Refer to the GBE Programming for Commercial Softeners and Filters, except HF xN Manual (P/N 01027295) for diagnostic procedures using the Smart (GBE) Controller. This manual can be obtained from your local dealer, on CPort (www.cport.culligan.com) under the Technical Service Tab or on the Service Tech App.**

Familiarize yourself with the replacement procedures and component parts thoroughly before attempting any repair.

WARNING! **Disconnect all electrical power to the unit before servicing. Bypass the unit and relieve system pressure before attempting repair.**

Depressurizing the HE 1.5 Twin Valve and System for Service

Complete shutdown procedure is as follows:

1. Make certain that the lines you shut off are for the system you are performing service on.
    a. Open bypass valve if one is available.
    b. Close the inlet isolation valve.
    c. Close the outlet isolation valve.
    d. Close the manual brine valve (If installed).
    e. Close the separate source isolation valve if one is available.
2. Cycle the valve to the backwash position.
3. Disconnect electrical power to the system.

We suggest the use of a mild cleaning solvent and a silicone lubricant. We suggest the following brands or their equivalents:

Cleaning Solvent: Simple Green --- water soluble for removing corrosion and dirt.

Dow Corning #111, silicone grease, must be used in order to maintain the unit's NSF certifications.

Circuit Board

1. Remove the electrical enclosure from the control valve. Remove the electrical enclosure screw, and then gently remove the enclosure from the control. See Figure 44.

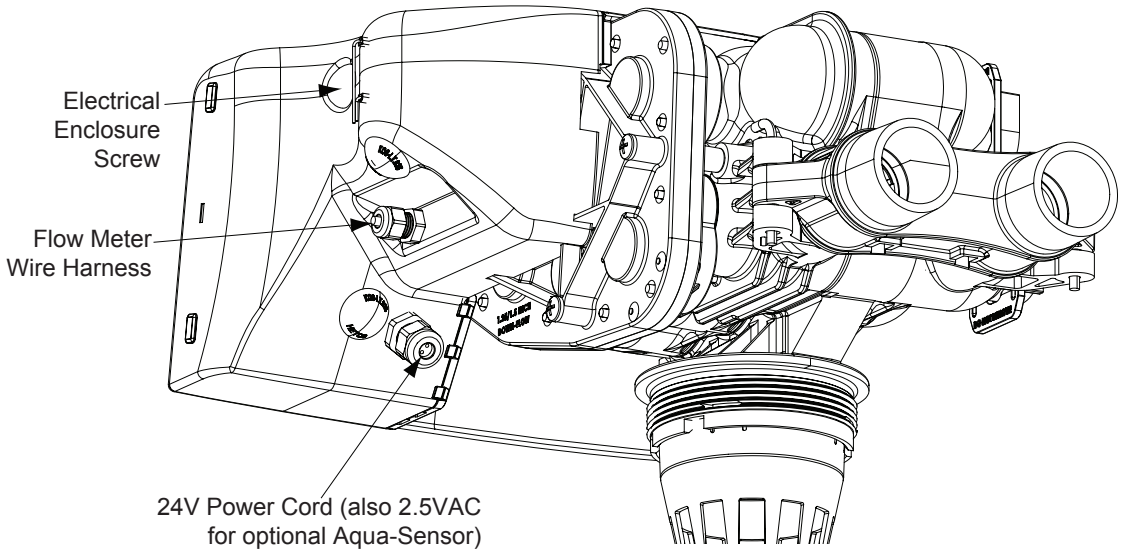

Figure 44. Electrical and accessory connections.

2. Remove the 24V power supply wire harness and flow meter connectors from the circuit board. See Figure 45.
3. Grip the circuit board from the edges and gently rotate it to the back of the enclosure (disengage the circuit board from the two support pins on the bottom of the enclosure). See Figure 46.

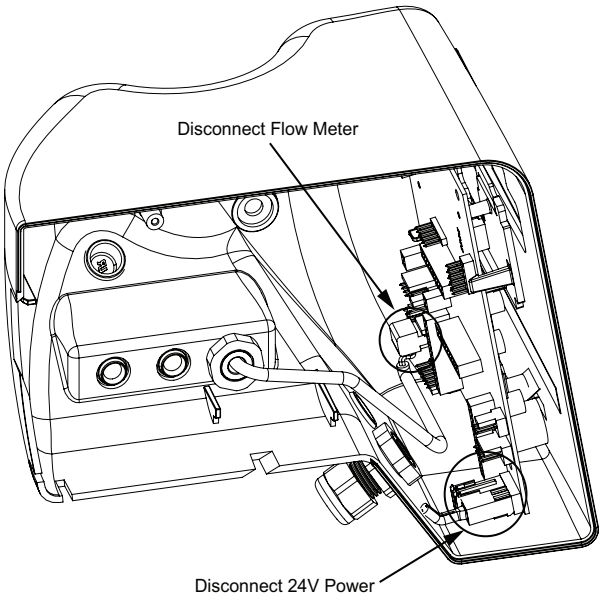

Figure 45. Remove flow meter and 24V connections.

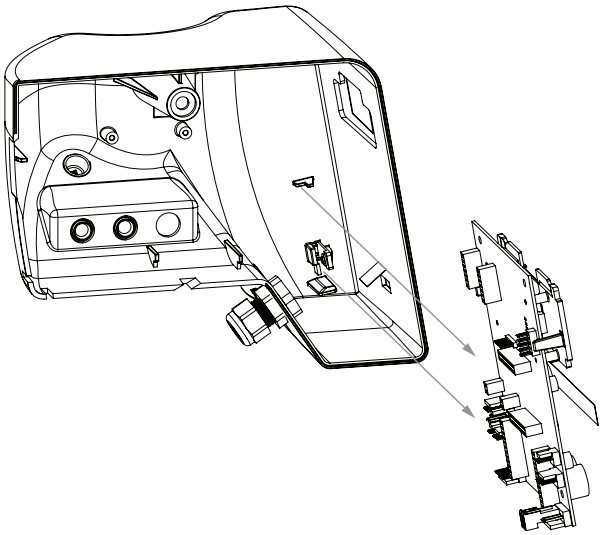

Figure 46. Remove circuit board.

4. Remove the circuit board from the enclosure.
5. Remove all connected wires from the board.
6. To install a new circuit board, follow steps 1–5 in reverse order.
7. Reprogram the circuit board.

CAUTION!	**Do not touch any surfaces of the circuit board. Electrical static discharges may cause damage to the board. Handle the AccuSoft™ circuit board by holding only the edges of the circuit board. Keep replacement boards in their special anti-static bags until ready for use. Mishandling of the circuit board will void the warranty.**

CAUTION!	**Properly connect the wire connectors to the circuit board. The wires must exit the plug-in connector opposite of the raised white base of the circuit board connector.**

CAUTION!	**Take extra care when connecting the 2.5 VAC and 24V power. Failure to connect properly will result in damage to the circuit board.**

Replace the Gear Motor

1. Disconnect the two motor power wires from the motor—note that the black wire is placed in the bottom position.
2. Remove the compartment plate screw.
3. Slide the compartment plate away from the gear motor and the control valve frame.
4. Disconnect the position sensor from the gearbox.
5. Remove the motor retainer rod by squeezing the snap release end of the rod. See Figure 47.
6. Firmly pull the motor straight outward. It may be necessary to gently tap on the motor body to get the motor to release.
7. In order to insert the new motor into the gearbox, it is necessary to get the “flat” on the motor shaft to line up with the “flat” in the gearbox drive-gear. The easiest way to do this is to hold the motor in position, attempting to push it into the drive gear, while causing the motor shaft to turn by using the Advanced Setup\Diagnostics\ Manual Motor Control menu. (Alternatively, if you remove water pressure from the valve, and/or remove the gearbox from the valve body, you can turn insert a large screw driver into the drive gear and use the screw-driver to rotate the drive gear so that the flat on the drive gear lines up with the flat on the motor shaft.)
8. Once the motor is fully inserted, re-install the motor retainer rod, compartment plate, and motor wire harness.

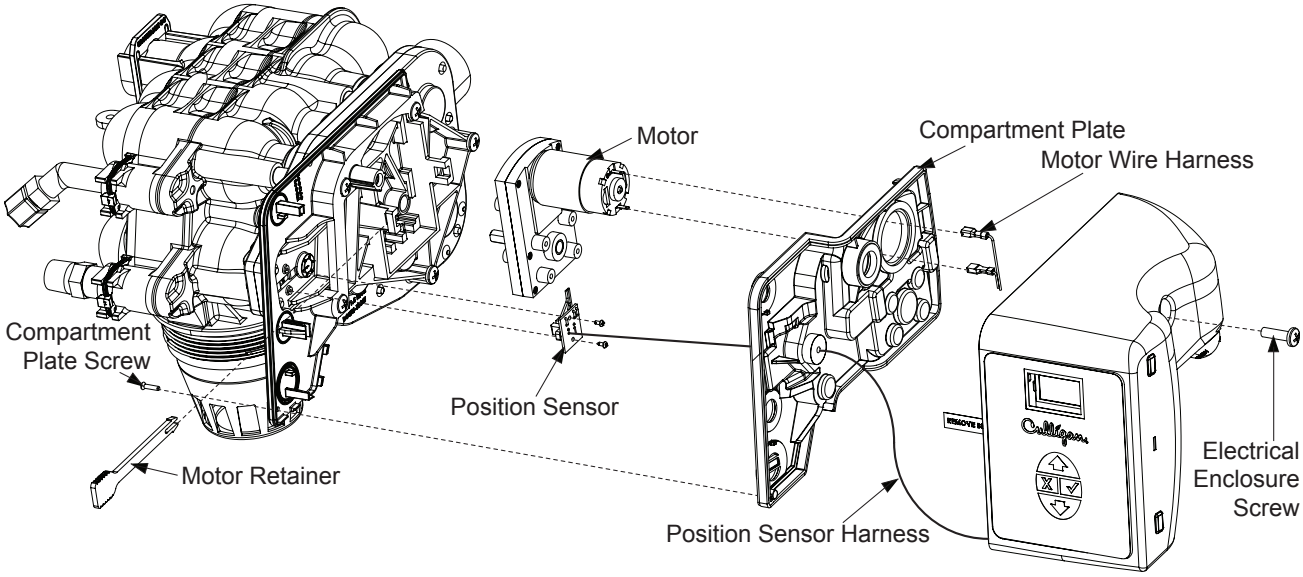

Figure 47. HE 1.5 gear motor.

Replace the Gearbox

NOTE Remove and retain the original motor when replacing only the gearbox.

1. Remove the HE 1.5 electrical enclosure. See "Circuit Board" on page 41 to remove the electrical enclosure.
2. Depressurize the unit (see page 40)

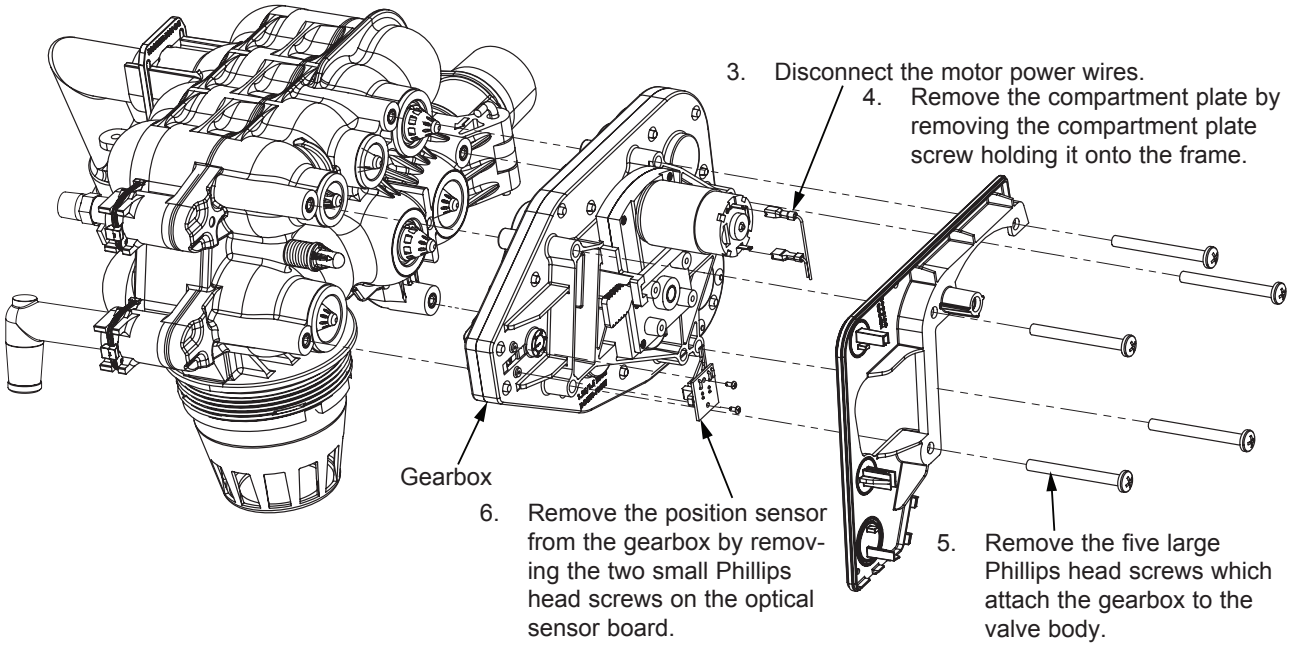

7. Install the new gearbox by reversing the directions listed above. Take care to make sure that the five large Phillips screws are fully inserted and tight.

Figure 48. HE 1.5 gearbox.

Replace the Pistons

1. Remove the HE 1.5 electrical enclosure. See "Circuit Board" on page 41 to remove the electrical enclosure.
2. Follow the directions in "Replace the Gearbox" to remove the gearbox.

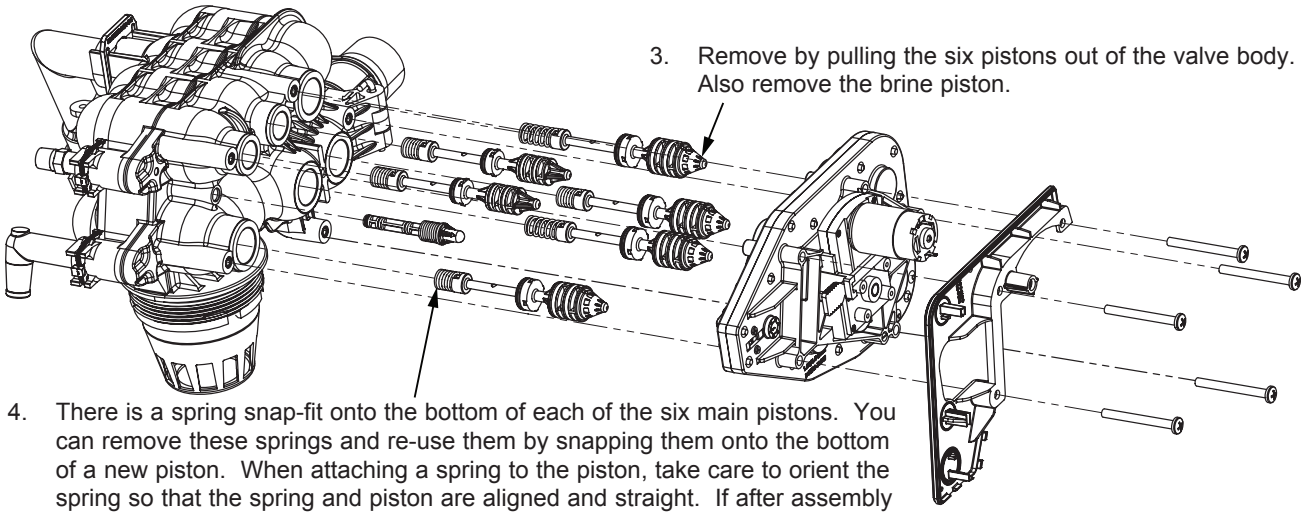

4. There is a spring snap-fit onto the bottom of each of the six main pistons. You can remove these springs and re-use them by snapping them onto the bottom of a new piston. When attaching a spring to the piston, take care to orient the spring so that the spring and piston are aligned and straight. If after assembly the two components are not straight, un-snap the spring, rotate it 180 degrees and re-snap it; it should now be straight.
5. Replace the gearbox by reversing the order of removing the gearbox.

Figure 49. Pistons.

Inspect/Clean/Replace the Eductor

1. Remove water pressure from the valve.
2. Remove the plastic clip from the upper service port opening (this port is located on the side of the valve body, just above the eductor plug). See Figure 50.
3. Remove the eductor plug retainer rod.
4. Remove the eductor cap.
5. Use the notched end of the retainer rod to extract the eductor assembly from the valve body. Use moderate pulling force to overcome the O-ring resistance.
6. Unscrew the eductor filter from the eductor body.
7. Use a small screw driver to extract the eductor nozzle from inside the eductor body.

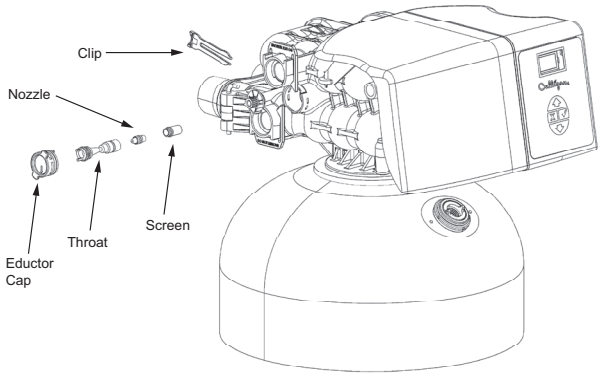

Figure 50. Removing the eductor nozzle and throat.

8. Re-assemble the valve by reversing these instructions. Take care when re-inserting the eductor cap – there is an arrow molded into the eductor cap. If the cap is installed with the arrow pointing “UP” then the valve is configured for Upflow brining. If the arrow is pointing “DOWN” then the valve is configured for Downflow brining.

Inspect/Clean the Brine Line and Drain Line Flow Control

1. Relieve water pressure from the valve.
2. Remove the cover by releasing the cover fastener from the control (see Figure 7 on page 11).
3. Remove the snap clip which retains the brine line adapter and drain line. (Note that it is easier to do this if you first remove the wing-screws that retain the HE electronics enclosure.) See Figure 51.
4. Remove the brine line adapter and drain connector.
5. Unscrew the brine line filter from the inner end of the brine line adapter and drain line flow control from the drain connector.
6. Reassemble by reversing the directions above.

NOTE The number of the flow control should face into the valve body.

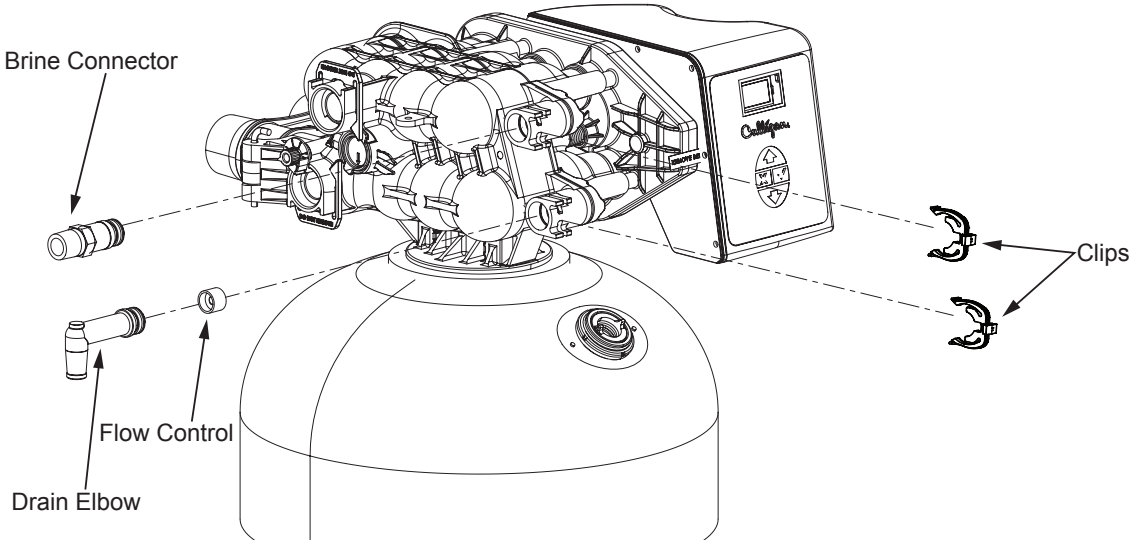

Figure 51. Brine line.

Drain Line Flow Control—Service

Located on the drain connection of the valve, the purpose of the drain line flow control is to regulate the up flow backwash required to expand and agitate the resin in the softener. The softener will allow maximum expansion of the resin, while preventing any loss to the drain.

The flow control principle is simple and trouble free. The specified rate of flow will be constant regardless of inlet pressure variations.

The flow washer pictured above is installed within a special nipple. Occasionally, the Drain Line Flow Control may become plugged with scale, rust, or other foreign material. If this occurs, cleaning is required. This can be done while the softener is in SERVICE and under pressure.

Brine System Analysis

1. WATER LEVEL in the brine tank
    a. Empty
    b. Below level of safety valve
    c. At level of safety valve float
2. SAFETY VALVE in brine tank
    a. Fiberglass rod travels up and down freely (approximately 1/2”)
    b. Fiberglass rod is rigid

If the brine system is functioning properly, there will be water in the brine tank, but the level should be below the safety valve float and the fiberglass rod should travel freely. If these conditions do not exist, one of the following conditions will indicate the nature of the problem:

1. NO WATER IN BRINE TANK—ROD TRAVELS FREELY. The flow control is plugged. Remove refill flow control. Clean or replace.
2. NO WATER IN BRINE TANK—ROD IS RIGID. Air or water slammed the safety valve closed before water could enter the tank. Clean parts at the base of the brine safety valve and also make sure that the seat of the check valve in the brine line is clean. Check for possible air leaks in the brining system.
3. WATER IN BRINE TANK UP TO SAFETY VALVE FLOAT—ROD IS RIGID. There are possible causes:
    a. Brine piston is not in service position when control is in service or brine piston seals are defective. Remove brine line while in service. There should be no flow to brine tank.
    b. Refill flow rate is too high or refill time length is too long. Check refill flow rate and compare to specification in Appendix C, page 66.

General Troubleshooting

NOTE **Error Codes can be found in the GBE Programming for Commercial Softeners and Filters manual (01027295)**

WARNING! The valve MUST be depressurized before removing any quick connection clips for servicing. Push the connector toward the control while removing the clips.

Problem/Symptom	Cause	Solution
1. Unit has blank display	Unit has no power	Verify that unit is connected to a constant power source (Not an outlet on a switch)
	Defective plug-in transformer	Replace plug-in transformer
2. Softener fails to automatically initiate a regeneration	Electrical service to the unit has been disrupted	Verify that unit is connected to a constant power source (Not an outlet on a switch)
	Meter not properly recording total gallons used. The flow meter connection and operation can be verified using the test mode setting on the circuit board.	Verify that meter cable is plugged into circuit board. Verify that meter cable is snapped into flow meter housing. Verify that flow meter has not become plugged with debris.
	Incorrect programming	See the GBE Programming for Commerical Softeners and Filters, except for HF xN Manual (P/N 01027295) and verify all settings.
3. Regeneration occurs at incorrect time	Timer setting incorrect	Reset timer
	Timer flashing	Reset timer and verify that unit is connected to a constant power source.
	Circuit board set to immediate regeneration	Set circuit board to delayed regeneration. See the GBE Programming for Commercial Softeners and Filters (except for HFxN) Manual (01027295) for programming instructions.
	Incorrect programming	See the GBE Programming for Commerical Softeners and Filters, except for HF xN Manual (P/N 01027295) and verify all settings.
4. Hard water to service. The root cause of hard water to service may also lead to problems such as iron or hardness bleed in softener.	Salt or Chemical storage tank is empty	Add salt or chemical to storage tank and verify that proper level of salt or chemical is maintained
	Eductor screen or nozzle plugged	Clean or replace eductor nozzle and/or screen
	Incorrect programming (Salt dosage too low for influent hardness)	See the GBE Programming for Commerical Softeners and Filters, except for HF xN Manual (P/N 01027295) and verify all settings.
	Insufficient water flowing to salt storage tank	Verify that refill settings are correct and clean the refill flow restrictor.
	Internal seal leak	Replace pistons
	Excessive water usage	Verify that programming is correct for Time Clock units increase regeneration frequency.
	Unconditioned water in water heater tank	Flush water heater to fill tank with conditioned water.
5. Loss of water pressure	Control and/or resin bed plugged with debris or iron build-up	Clean control and increase frequency of regenerations or length of backwash. Plant recondition if necessary
	Inlet manifold plugged	Remove control from tank and clean inlet manifold. Check if eductor screen/nozzle are also plugged.
	Control plugged with foreign material broken loose from recent plumbing work.	Clean control.

Problem/Symptom	Cause	Solution
6. Loss of mineral to drain	Improper drain line flow control	Ensure that the control has the proper drain line flow control.
	Air in water system	Ensure that system has proper air eliminator control.
7. Mineral to service	Defective outlet manifold	Replace outlet manifold
8. Water in brine storage tank up to float	Plugged drain line flow control (Unit will not draw brine)	Clean drain line flow control.
	Plugged eductor system (Unit will not draw brine)	Clean eductor screen and nozzle
	Slow leak to brine line. Faulty brine piston.	Replace brine piston.
	Power outage while control was in refill position	Verify that item A, B, or C is not the cause for the extra water in the storage tank.
9. Excessive water in salt storage tank (Water above brine valve float).	Faulty brine valve; float shut-off failure. When the brine valve is faulty, one of the items listed under problem 8 is also required in order to produce excessive water in the storage tank .	Clean brine valve, replace stem seat, or replace brine valve.
10. Unit fails to refill storage tank.	Refill restrictor plugged.	Clean or replace refill restrictor.
	Air in brine line causes float to slam shut (float rod is rigid).	Verify that all tubing connections are properly assembled.
11. Unit fails to draw brine or chemical.	Drain line flow control is plugged.	Clean drain line flow control.
	Plugged eductor system.	Clean or replace eductor screen or nozzle.
	Line pressure too low.	Increase line pressure to a minimum of 30 psi (210 kPa).
	Internal control leak.	Replace pistons.
	Drain line too long or restricted.	Verify proper drain line length. See page 15.
	Eductor is drawing air into system.	Verify that all tubing connections are properly assembled.
12. Unit uses an excessive amount of salt or chemical.	Incorrect programming.	See the GBE Programming for Commerical Softeners and Filters, except for HF xN Manual (P/N 01027295) and verify all settings.
	Excessive water in storage tank.	Refer to problems 8 & 9.
13. Continuous flow to drain.	Internal piston leak.	Replace pistons.
	Piston jammed in position.	Replace pistons.
	Power failure while unit was in regeneration.	Restore power to unit. Verify that unit is connected to a constant power source.
14. Salt water to service.	Inadequate Brine/Rinse setting for desired salt dosage.	See the GBE Programming for Commerical Softeners and Filters, except for HF xN Manual (P/N 01027295) and verify all settings.
	Low water pressure lengthens brine draw time.	Increase line pressure to a minimum of 30 psi (210 kPa).
	Too much brine in the storage tank.	Refer to problems 8 and 9.

Aqua-Sensor® Troubleshooting

The following procedure will help you diagnose problems in units equipped with Aqua-Sensor® sensing device. Because many sensor problems are actually regeneration problems, it contains a combination of sensor diagnostics and routine control valve and brine system checks. Refer to the GBE Programming for Commercial Softeners and Filters, except for HF xN Manual (P/N 01027295) . This manual can be obtained from your local dealer, CPort (www.cport.culligan.com) under the Technical Service Tab or on the iPad Service Tech App.

Recording Important Information

Record the following information from the GBE diagnostic menu screens to use in analyzing the Aqua-Sensor's performance.

Select: Main Menu > Diagnostics > Advanced Stats > Regen Stats

Last Regen Trigger: _____

If it shows Aqua-Sensor, the probe and circuits are working correctly to detect resin exhaust. If you see Manual, Flow Meter, Manual, etc., the Aqua-Sensor may not be reading correctly or programming could be favoring another trigger to regenerate. Gallons or Reserve could be higher than needed for the probe to signal exhaustion. Be sure your reserve is less than 5% in the Regen Setup.

Last Brine Draw Slow Rinse: _____

If it shows a number of minutes less than the programmed Slow Rinse Time, found in Advanced Setup > Cycle Times > Slow Rinse, then the patented rinse-out feature of the Aqua-Sensor is operating based on the probe sensing th eremoval of brine and hardness during regeneration. If the number is the same as the Slow Rinse Time, the setting could be too short for the salt dosage and eduction rate or the probe may not be sensing the rinse-out. Lengthening the cycle time greater than 75 minutes can often insure it isn't the first possibility. In general, the time you read should be 8-15 minutes less than the cycle time.

Select: Main Menu > Diagnostics > Check Sensors

AquaSensor Supply Voltage 2.5VAC: _____

This should always read PASS. If you see FAIL, check the voltage at the wall transformer for 2.5VAC. If the transformer checks out it might be the power cord, the pin connector at the board or damage to the circuit board.

Pass SIM Test: Ignore this unless you have the Simulator Box (P/N 01017705 plugged into the board instead of the Aqua-Sensor Probe at the time of the reading. Reading PASS is only necessary when using the Sim Box.

With water flowing through the tank record Z-ratio: _____

This is a reading from the sensing probe while you have water flowing passed it. Unless the tank has just finished a full regeneration, this reading should be increasing slightly or at least be a number higher than the Z-minimum recording. The exact number is not important as you might see something near 1078 or higher. What is critical is the number is increasing, since it determines the need to regenerate.

Z-minimum: _____

If this number remains at 0000 the tank has not yet regenerated successfully sending brine thru the resin bed or there is no 2.5VAC power to operate the probe; preventing it form recording a number; or the probe is not installed correctly inside the tank and into the circuit board; which would also affect the Z-ratio reading. Z-minimum should always be a number lower than Z-ratio, since it is the starting point for monitoring conductivity in the resin. Also it might change slightly after each successful regeneration.

Z-increase %: _____

This number represents a difference, an increase in Z-ratio over the Z-minimum. As this percentage reaches 7.5% for longer than 6 minutes, the circuit board will get ready to regenerate. The percentage can be seen higher than 7.5%, but it has no bearing on the need to regenerate.

By understanding each of these indicators in the programming, technicians should be able to see if the Aqua-Sensor is functioning properly. Remember that it is only a trigger to regenerate based on reading the hardness level in the resin bed. If the softener does not fully operate mechanically through a proper regeneration, the sensor cannot perform its functions correctly either.

If the power supply, programmed settings and regeneration are all correct, and the unit fails to trigger a regeneration from the sensor, replace the Aqua-Sensor probe.

If all of these factors are correct and the unit seems to be continually regenerating, consider the quality of the resin and a proper regeneration before deciding to replace the Aqua-Sensor probe.

Flow Diagrams

HE 1.5 Twin Flow Valve Piston Locations

The flow valve controls the movement of untreated and treated product during downflow and upflow regeneration cycles. Figure 52 identifies each piston as installed. For example, in this cycle (downflow service), the P1 and P2/P3 valves are open; the P4, P5, P6, and PR valves and the Brine Piston are closed.

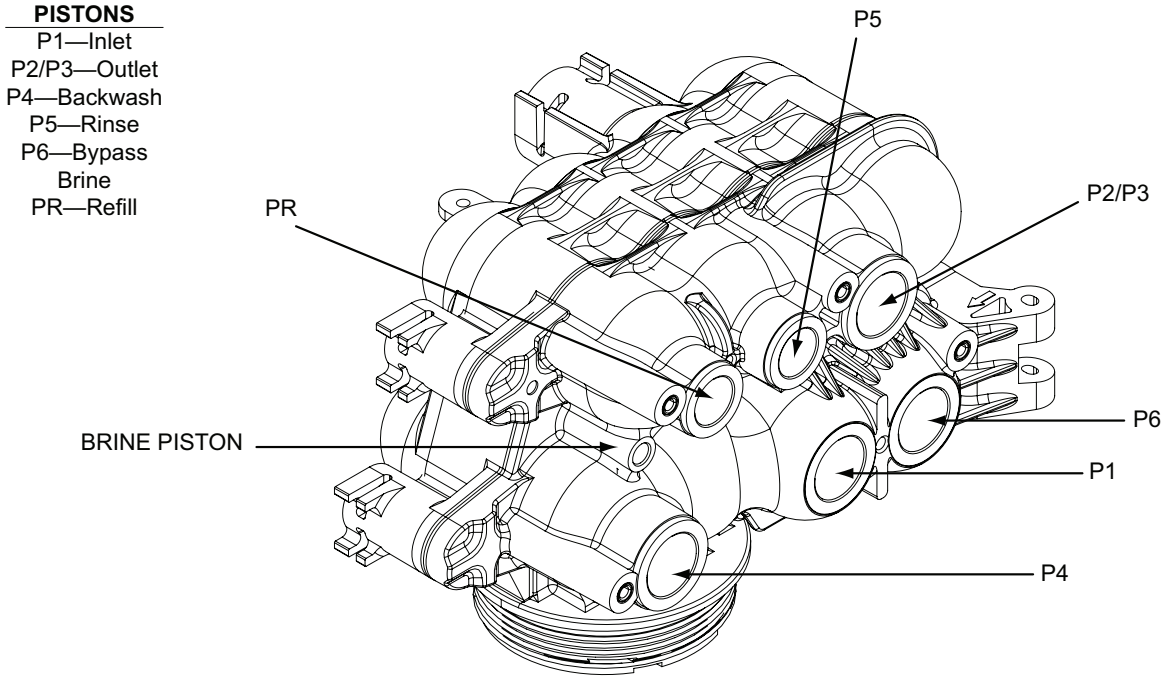

Figure 52. HE 1.5 Twin valve piston locations.

The cycle sequence is different for downflow regeneration than for upflow regeneration. Note the regeneration cycle sequence for downflow and upflow regeneration.

Downflow Regeneration Cycle Sequence

1. Service
2. Backwash
3. Brine Draw/Slow Rinse
4. Fast Rinse
5. Refill (Brine)
6. Bypass

See page 50 through page 56 for Downflow Regeneration flow diagrams.

Service

Raw water is allowed in the inlet to the top of the tank. The water is run through the resin up the manifold to the outlet. The water to the outlet should be soft if the system is operating properly.

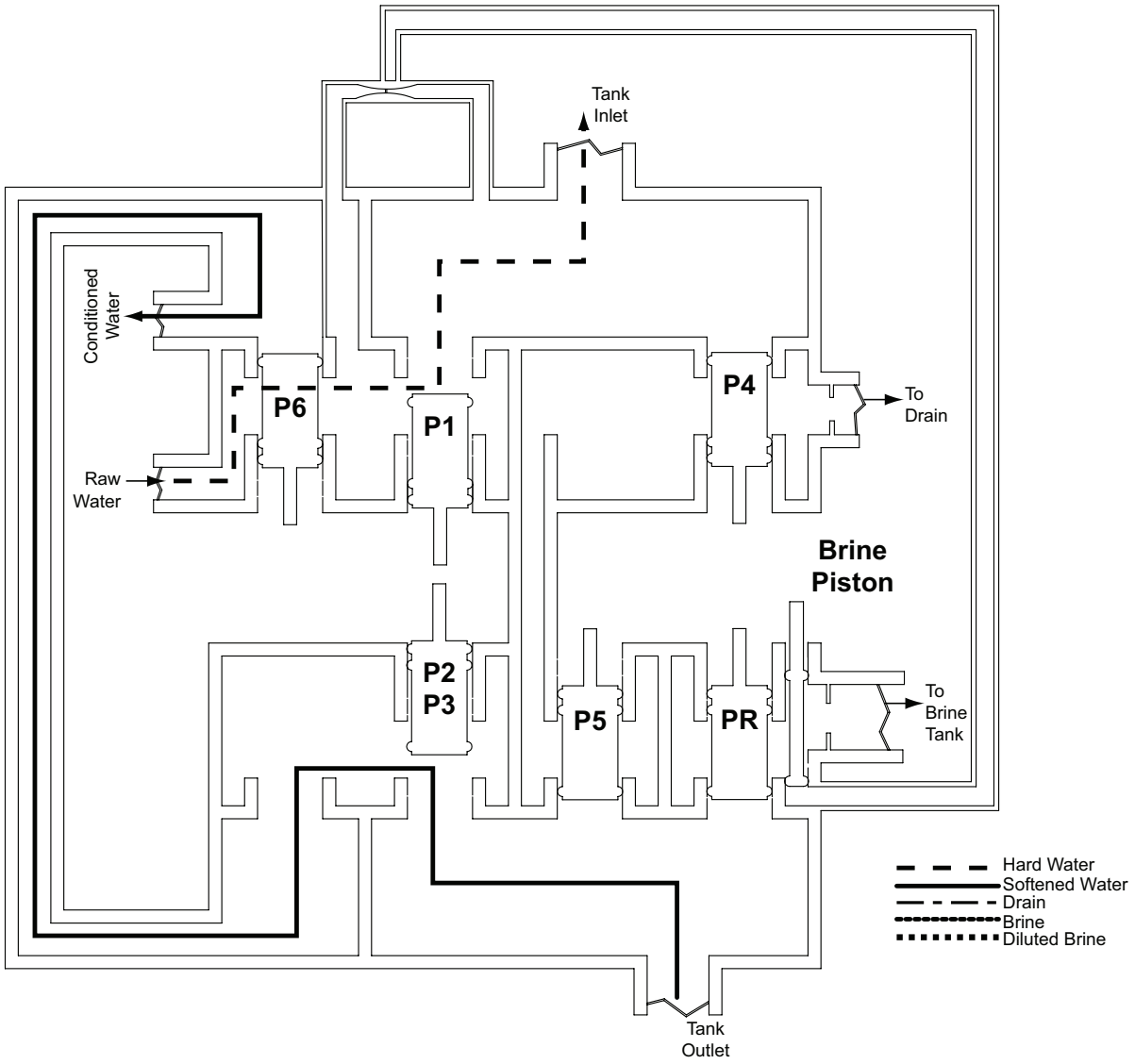

Figure 53. Down flow regeneration—service.

Service	
Piston	**Position**
P1–Inlet	Open
P2/3–Outlet	Open
P4–Backwash	Closed
P5–Rinse	Closed
P6–Bypass	Closed
Brine Piston	Closed
PR–Refill	Closed

Backwash

Raw water is directed down the center of the manifold, up through the resin, out the top of the tank to drain. The water to drain should be hard.

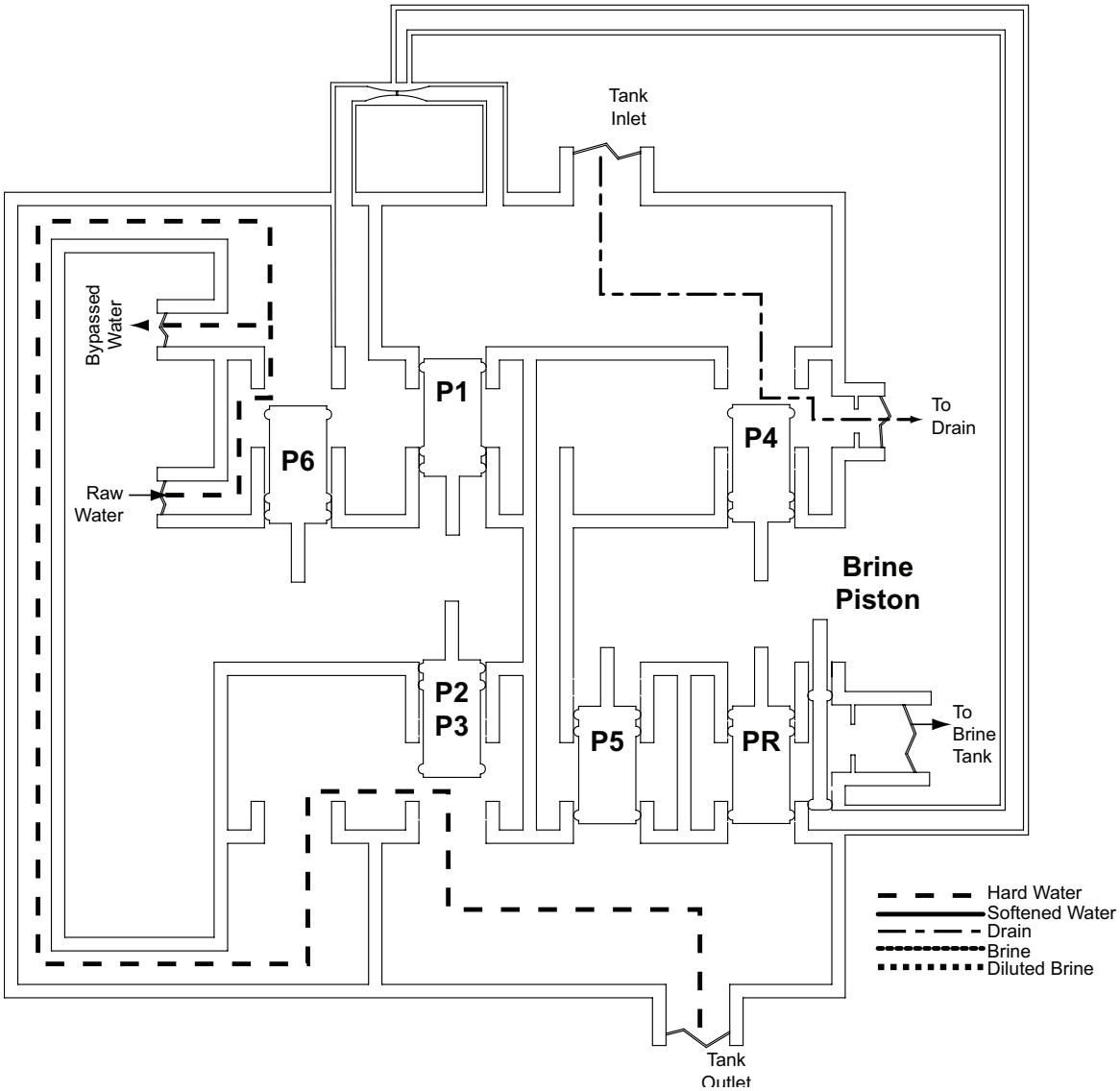

Figure 54. Down flow regeneration—backwash.

Backwash	
Piston	**Position**
P1–Inlet	Closed
P2/3–Outlet	Open
P4–Backwash	Open
P5–Rinse	Closed
P6–Bypass	Open
Brine Piston	Closed
PR–Refill	Closed

Brine Draw

Raw water is directed from the inlet through the nozzle and into the throat. A vacuum is created and concentrated brine is educted (drawn). The raw water and concentrated brine combine, enter the mineral tank, and pass through the resin, up the manifold and to the drain. Once all of the brine has been educted and the brine valve seats, the unit goes into slow rinse. Hard water is allowed to service during regeneration.

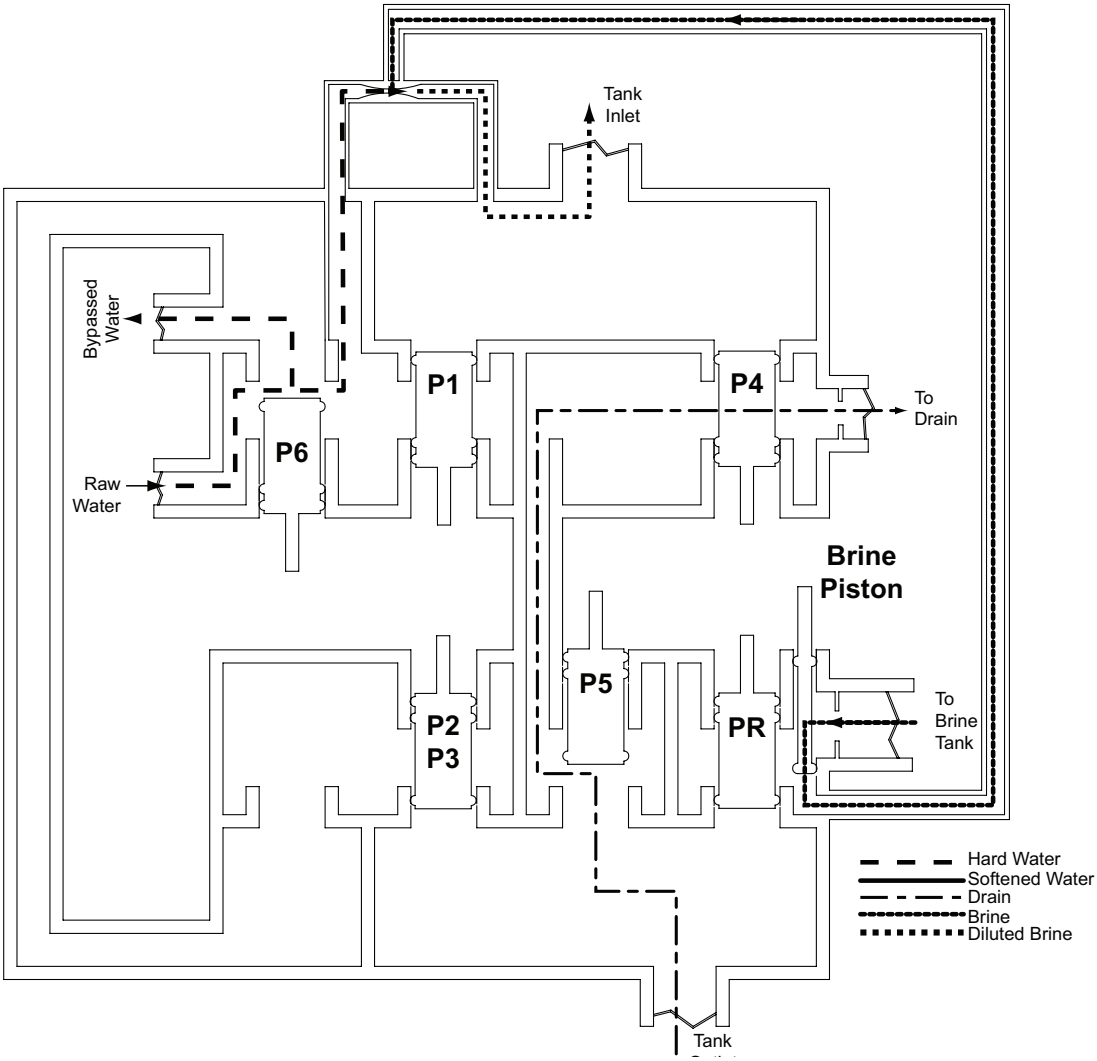

Figure 55. Down flow regeneration—brine draw.

Brine Draw	
Piston	**Position**
P1–Inlet	Closed
P2/3–Outlet	Closed
P4–Backwash	Closed
P5–Rinse	Open
P6–Bypass	Open
Brine Piston	Open
PR–Refill	Closed

Slow Rinse

Raw water is directed from the inlet through the nozzle and into the throat. A vacuum is created but the brine valve has seated, so no brine is educted. The raw water enters the mineral tank, passes through the resin, up the manifold and to the drain. Hard water is allowed to service during regeneration.

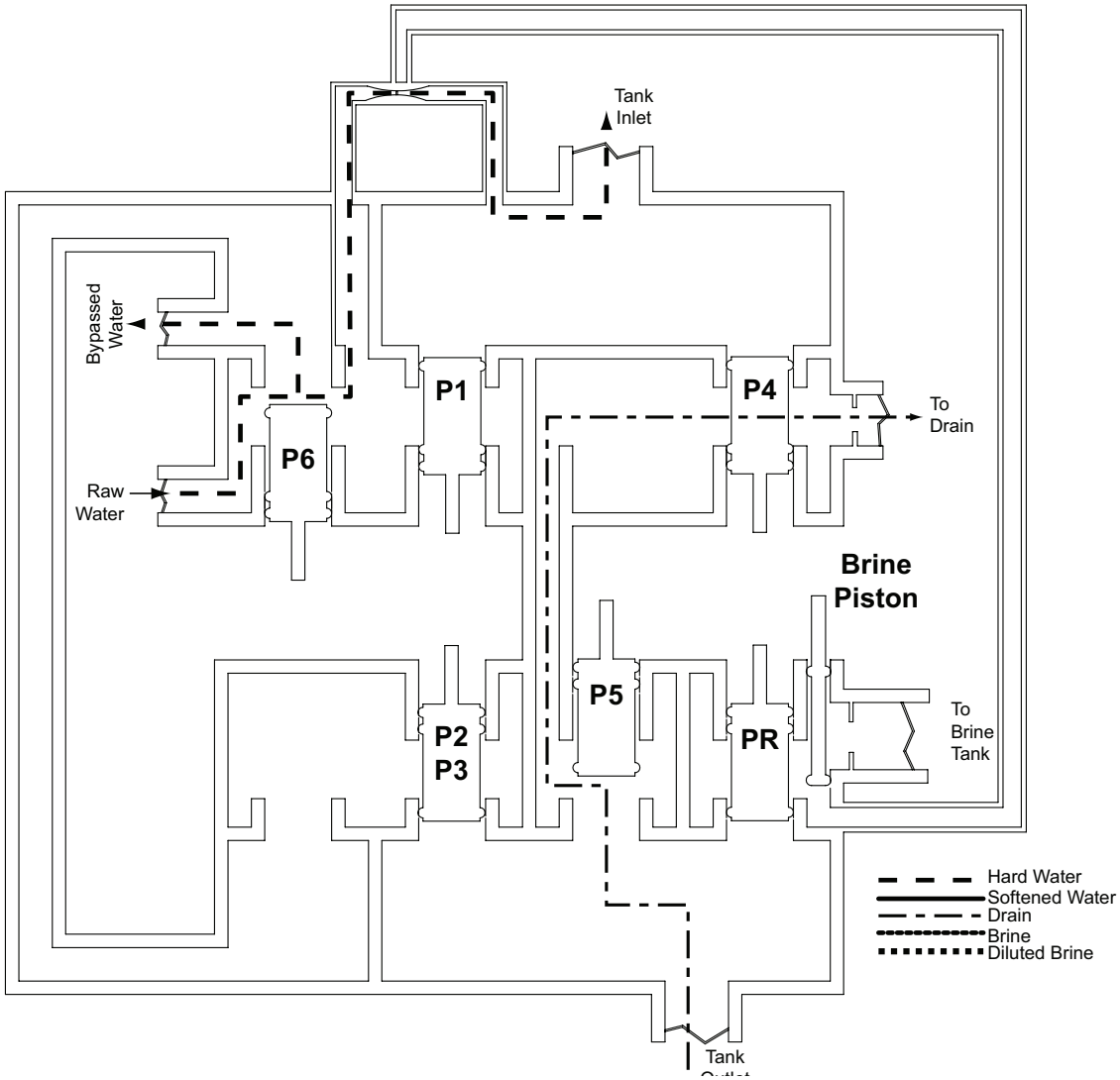

Figure 56. Down flow regeneration—slow rinse.

Slow Rinse	
Piston	**Position**
P1–Inlet	Closed
P2/3–Outlet	Closed
P4–Backwash	Closed
P5–Rinse	Open
P6–Bypass	Open
Brine Piston	Open
PR–Refill	Closed

Fast Rinse

Raw water is directed from the inlet to the top of the tank, down the resin, up the manifold, and out to drain. Hard water is allowed to Service during regeneration.

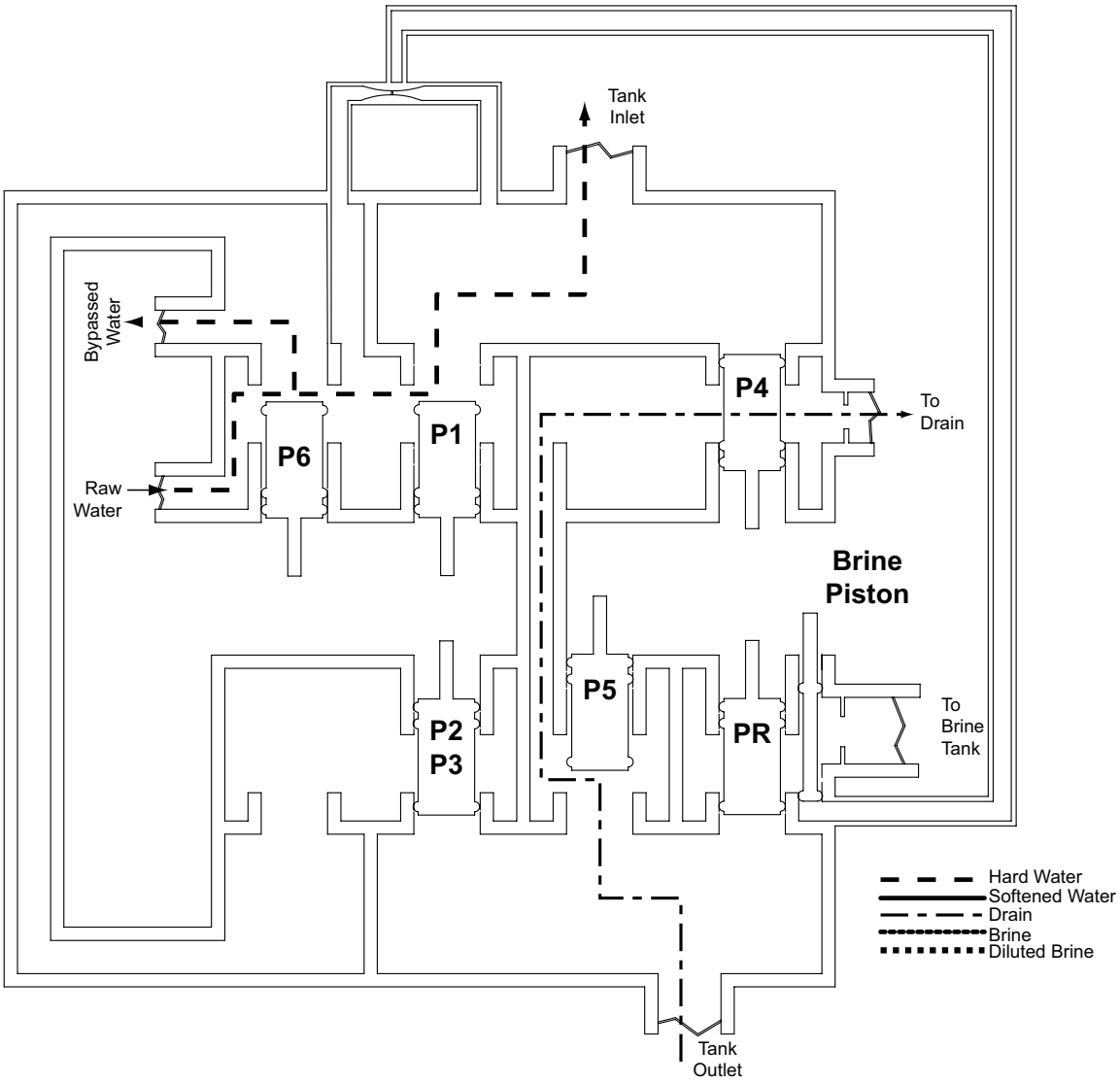

Figure 57. Down flow regeneration—fast rinse.

Fast Rinse	
Piston	Position
P1–Inlet	Open
P2/3–Outlet	Closed
P4–Backwash	Closed
P5–Rinse	Open
P6–Bypass	Open
Brine Piston	Closed
PR–Refill	Closed

Refill

To make the brine, water flows into the salt storage area during the fill stage. Fill cycle length depends on the salt dosage. Use soft water for refill.

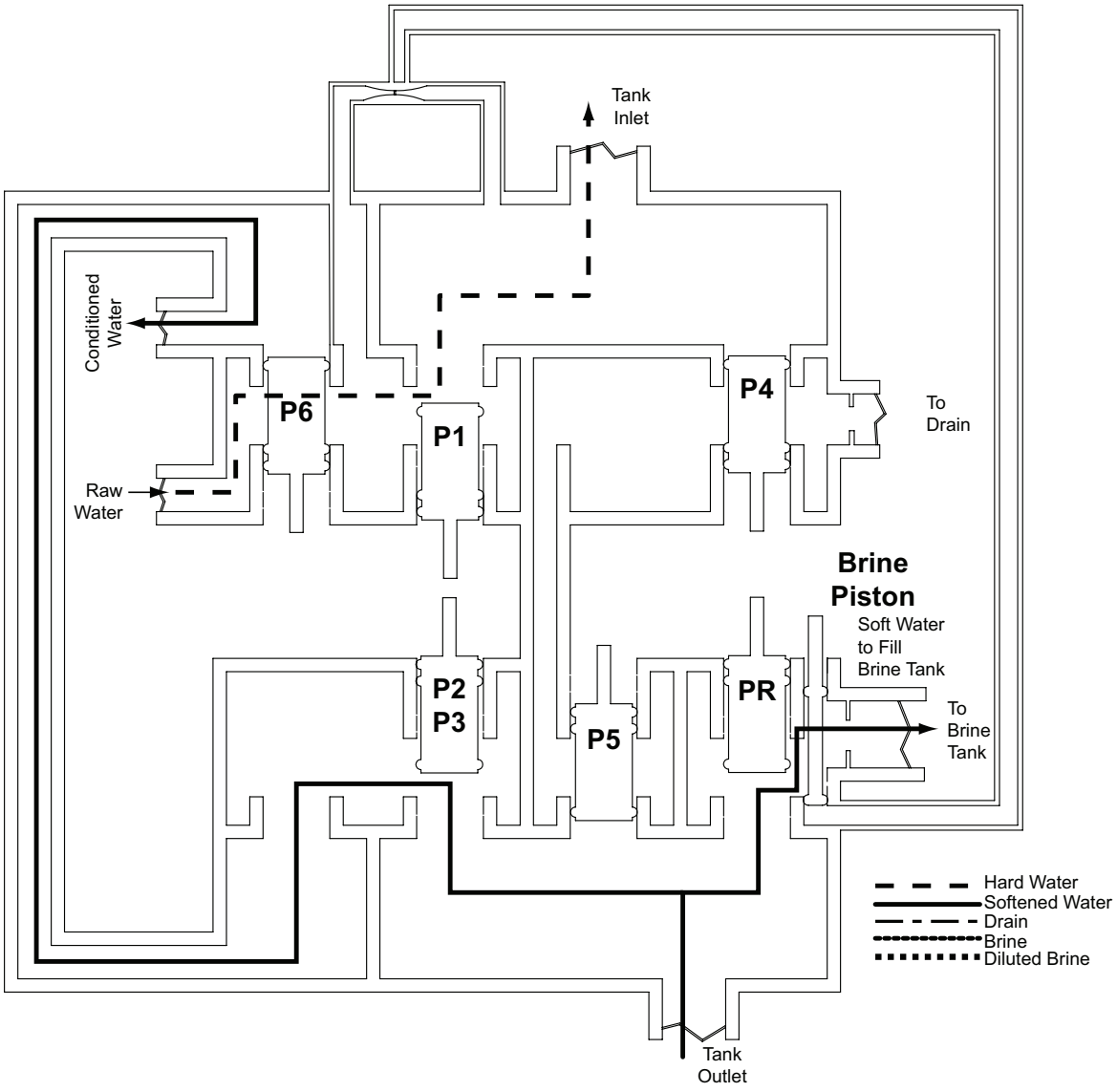

Figure 58. Down flow regeneration—refill.

Refill	
Piston	Position
P1–Inlet	Open
P2/3–Outlet	Open
P4–Backwash	Closed
P5–Rinse	Closed
P6–Bypass	Closed
Brine Piston	Closed
PR–Refill	Open

Bypass

The HE control can be bypassed for a preset time duration. Raw water is allowed in the inlet of the control and internally bypassed to the outlet of the control (hard water is allowed to service).

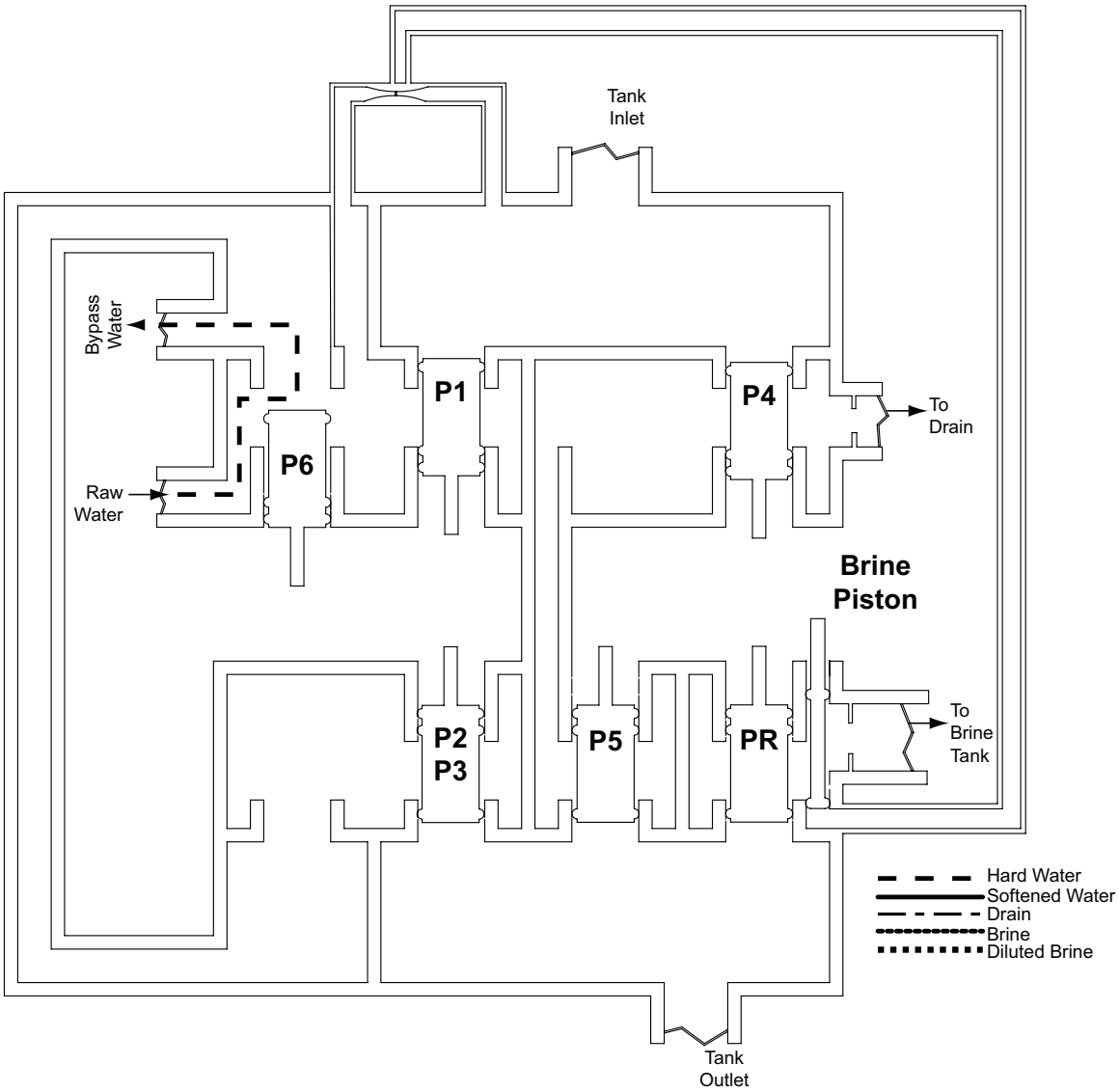

Figure 59. Down flow regeneration—bypass.

Bypass	
Piston	Position
P1–Inlet	Closed
P2/3–Outlet	Closed
P4–Backwash	Closed
P5–Rinse	Closed
P6–Bypass	Open
Brine Piston	Closed
PR–Refill	Closed

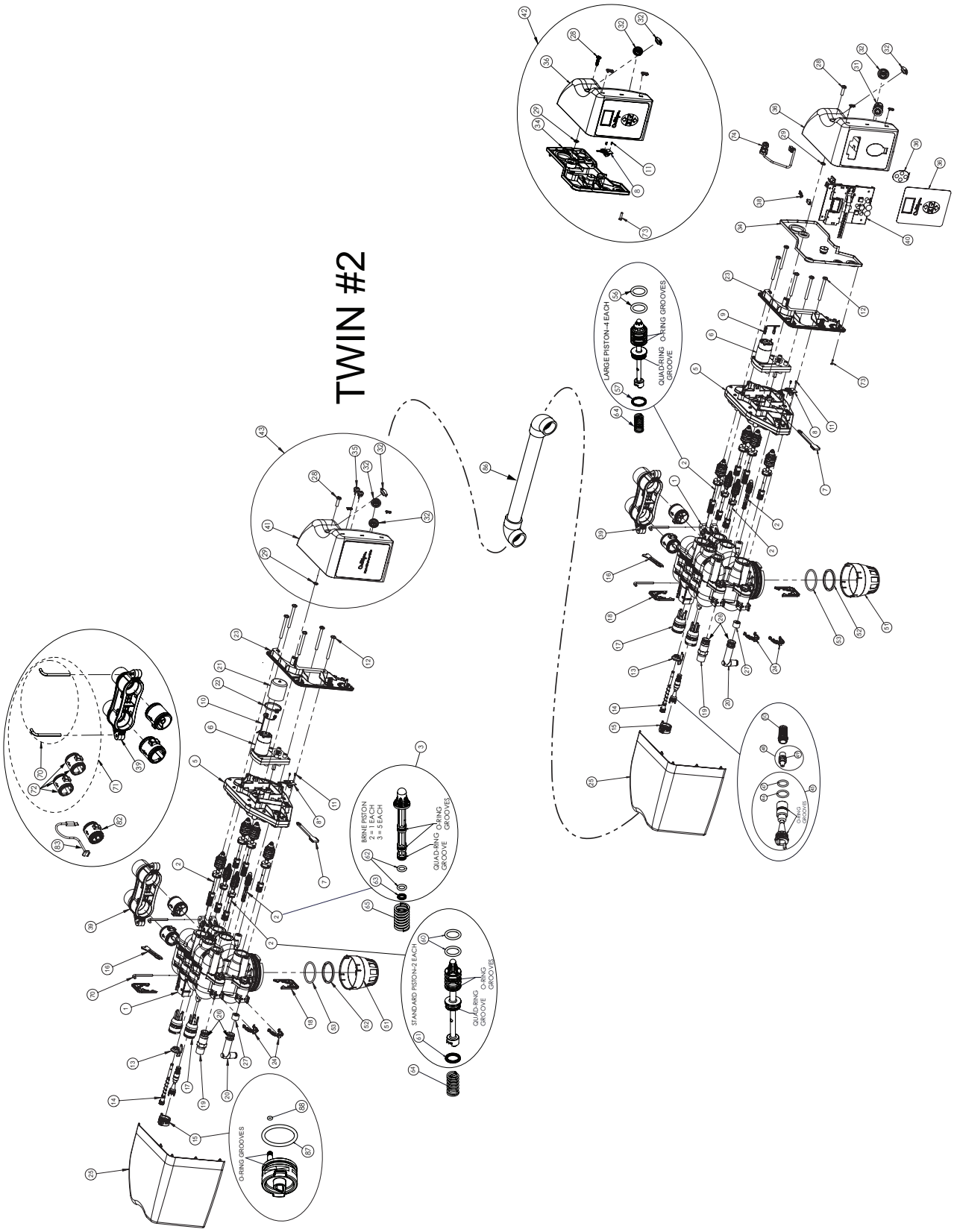

Figure 60. Control valve assembly.

HE 1.5 Twin Control Valve Parts List

Item	Part No.	Description
	01031601	HE 1.5 Control Valve, Complete
	01031604	HE 1.5 Twin Control Valve #2, Complete
1	01031628	Body Chambers, Welded, 1.5"
2	01031428	Piston Rebuild Kit, Includes 6ea Piston assemblies and 1ea Brine Piston Assembly
3	P1025242	Brine Piston w/80 Duro Quad Seal, HE 1.25” - HE 1.5”, 5ea
5	01031620	Gear Box Assembly
6	01024332	Gearmotor
7	P1020415	Retainer, Gearmotor, 10ea
8	—	Wire Harness w/ Position Sensor (not available for sale), Kit
8*	—	Wire Harness w/ Position Sensor, Extended, Control #2 (not available for sale), Kit
9	01022735	Wire Harness, Motor, HE
10	01025493	Wire Harness, Motor, HE, Extended
11	P1020433	Position Sensor Screw, 10ea/Kit
12	P1023546	Gear Box Assembly Screw, 10ea
13	P1020289	Dial-a-Softness Knob, 10ea
14	P1022185	Dial-a-Softness Assembly w/ O-Rings, 10ea
15	P1020487	Plug Assy, Eductor Housing, HE, 10ea
16	P1020290	Eductor Plug Retainer, 10ea
17	P1020489	Plug, Backwash Assy, 10ea
18	P1020291	Backwash Bypass Retainer, 10ea
19	P1024022	Drain Straight Fitting Assembly, 5ea
20	P1023021	Drain Elbow Assembly, 10ea
23	01030232	Frame, Hood, Compact, HE Control, Outdoor
24	P1030127	Retainer, Brine & Drain Elbow, 10ea
25	01030232	Cover, Hood, Compact, HE 1½" Control, Outdoor
26	P0440268	O-Ring, Brine & Drain Elbow, 10ea/Kit
27	P0401031	Backwash Flow Control, 5.5 gpm, 10ea
27	P0708008	Backwash Flow Control, 7 gpm, 10ea
27	P0708011	Backwash Flow Control, 11.5 gpm,10ea
28	P0318383	Enclosure Screw, 10ea/Kit
29	P1023122	Retainer for Enclosure Screw, 10ea/Kit
31	P1025274	Strain Relief Fitting, 10ea
32	P1025277	Liquid Tight Hole Plug, 10ea/Kit
34	—	Compartment Plate w/ Gaskets (not available for sale), Kit
35	P1025278	Bushing, Strain Relief, 10ea/Kit
36	—	Enclosure w/ Decal and Keyboard (not available for sale), Kit
38	01017134	Power Cord
39	01023550	Connector, Plumbing, 1½" NPT, Control 1½"
40	01020745	Replacement Circuit Board
41	—	Enclosure w/ Decal (not avail. for sale), Kit
42	01025650	Electronics Enclosure Kit w/o Circuit Board

Item	Part No.	Description
43	01025652	Electronics Enclosure Kit, Twin, Control #2
45	P1022796	Eductor Throat with O-rings, Downflow, Beige, 10ea
45	P1022723	Eductor Throat with O-rings, Downflow, Blue, 10ea
46	P1020603	Eductor Throat O-ring, Large, 10ea/Kit
47	P1020428	Eductor Throat O-ring, Small, 10ea/Kit
48	P1013895	Eductor Nozzle w/ O-ring, Beige, 10ea
48	P1024333	Eductor Nozzle w/ O-ring, Green, 10ea
48	01014253	Eductor Nozzle w/ O-ring, Yellow
49	P0308438	O-ring, Eductor Nozzle, 10ea/Kit
50	P1029422	Screen, 10ea
51	01019742	Disperser
52	P1023558	Retaining Ring, 10ea
53	P1023560	O-ring, Manifold, 10ea
56	P1024364	Large Piston, O-ring, 25ea/Kit
57	P1025239	Large Piston Quad Ring, 25ea/Kit
60	P1020431	Small Piston, O-ring, 25ea/Kit
61	P1025199	Small Piston Quad Ring, 25ea/Kit
62	P1020426	Brine Piston O-ring 25ea/Kit
63	—	Brine Piston Quad Ring (not available for sale), Kit
64	P1020252	Main Piston Spring, 10ea
65	P1020286	Brine Piston Spring 10ea
70	P1009075	Retaining Clip, 10ea/Kit
71	01014033	Coupling Kit
72	P1009099	O-ring, Couplings/Meters, 50ea/Kit
73	P1023200	Screw, Compartment Plate, 10ea/Kit
74	01025282	Harness, Meter, 28” Long, Outdoor
82	01026849	Meter Kit Assembly, HE 1”, LF
83	01025490	Harness, Meter, 48" Long, Two Connectors, Outdoor
86	01024788	Interconnecting Tank Assembly (14" and 16" Tanks)
86	01024789	Interconnecting Tank Assembly (18" and 21" Tanks)
87	P1021162	O-ring, 10ea/Kit
88	P1020424	O-ring, 10ea/Kit
*	P0451701	Hose Clamp, Drain, 10ea
*	P1023559	O-ring, Valve to Tank, 10ea
*	01014897	Transformer, Dual Output
*	01020620	Transformer, Dual Output w/ 6' Power Cord (optional)
*	P0443494	Adapter, 1/2" Tube X 1/2" NPT, 10ea
*	P0440516	1/2" Tube Insert, 25ea
*	P1024720	1/2" Tee, 10ea
*	01024216	1½" Bypass Valve (includes Bypass Piston)
*	P1014426	Backwash Flow Control, Spacer, 10ea
*	01025281	Replacement Bypass Piston for HE 1.25/1.5
*	01025561	Transformer, Outdoor, 24V, HE Compact Hood

*Not shown in diagram

Replacement Softener Tanks and Media

Model No.	Tank Size	Replace-ment Tank Part No.	Manifold Part No.	Underbedding Required			Cullex® Resin Req'd Bags[1]
				Lbs.	Bags	Part No.	
HE-060	14x47	01019578[2]	01011985	30	1	00160707	2
HE-090	16x53	01019577[2]	01011985	40	2	00160702	3
HE-120	16x65	01019579[2]	01011985	40	2	00160702	4
HE-150	18x65	01025244[2]	01019618	70	1 1	00160702 00160710	5
HE-210	21x62	01025245[2]	01019618	80	4	00160702	7
HE-150	18x65	01022257[3]	01019618	80	4	00160702	5
HE-210	21x62	01022256[3]	01019618	80	4	00160702	7

[1]Each Cullex (00156001) bag is 1 cubic foot.

[2]These tanks have an Aqua-Sensor® port in top head.

[3]These tanks do NOT have a port in the head.

NOTE **Some tank sizes changed in August 2009. Refer to Bulletin CI-0914 for replacement tanks on systems prior to that date.**

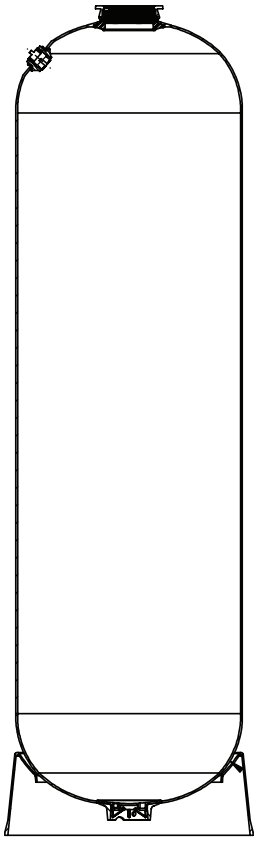

Figure 61. HE 1.5 tank assembly.

Aqua-Sensor Plug and Probe

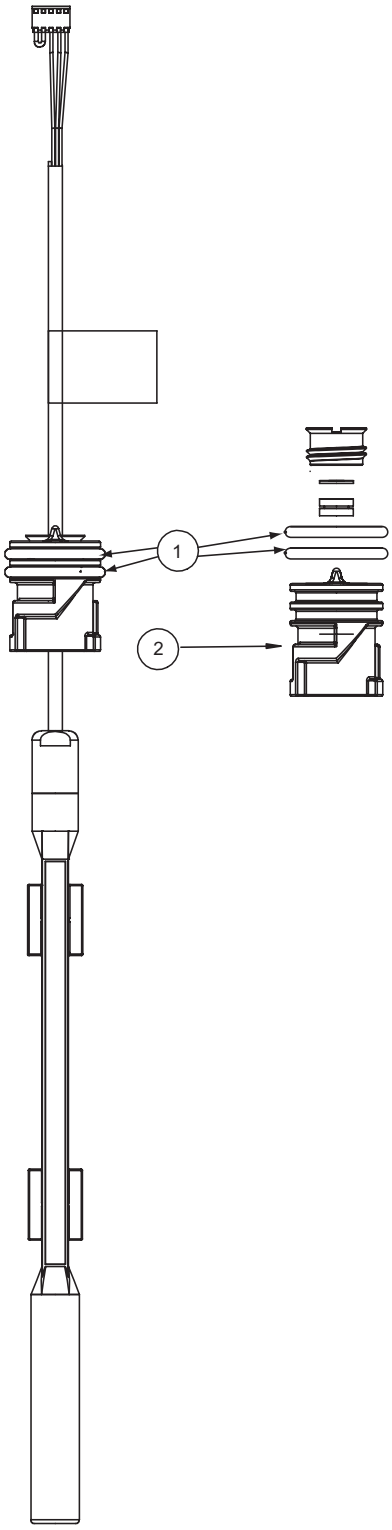

Item No.	Part No.	Description	Qty
—	01025279	Aqua-Sensor Probe, HE 1.5	
1	P1017434	O-Ring, Plug and Sensor, 10ea	2
2	01015122	Aqua-Sensor Plug	1

Figure 62. Aqua-Sensor probe.

18"x38" and 24"x40" Brine Systems

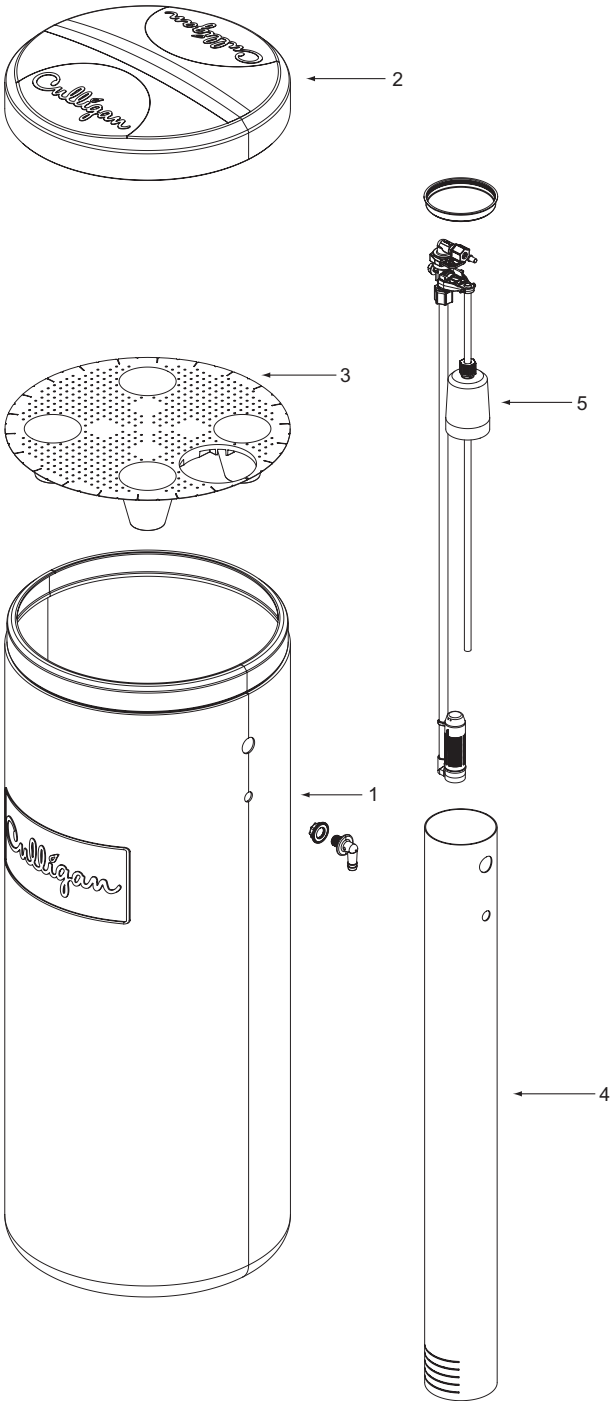

Item No.	Qty.	Part No.	Description
—		01019525	18” x 38” Brine System Complete
—		01018720	24” x 40” Brine System Complete
1	1	01018716	Tank Repl 18” x 38”
1	1	01018718	Tank Repl 24” x 48”
2	1	01018717	Cover Repl 18”
2	1	01018719	Cover Repl 24”
3	1	01018713	Salt Plate Repl 18”
3	1	01018714	Salt Plate Repl 24”
4	1	01018708	Brine Well with Cap
5	1	01018706	Brine Valve Repl 24” (1/2”)
5	1	01019526	Brine Valve Repl 18" (1/2")

Figure 63. 18"x38" and 24"x40" brine systems.

24"x50" Brine System

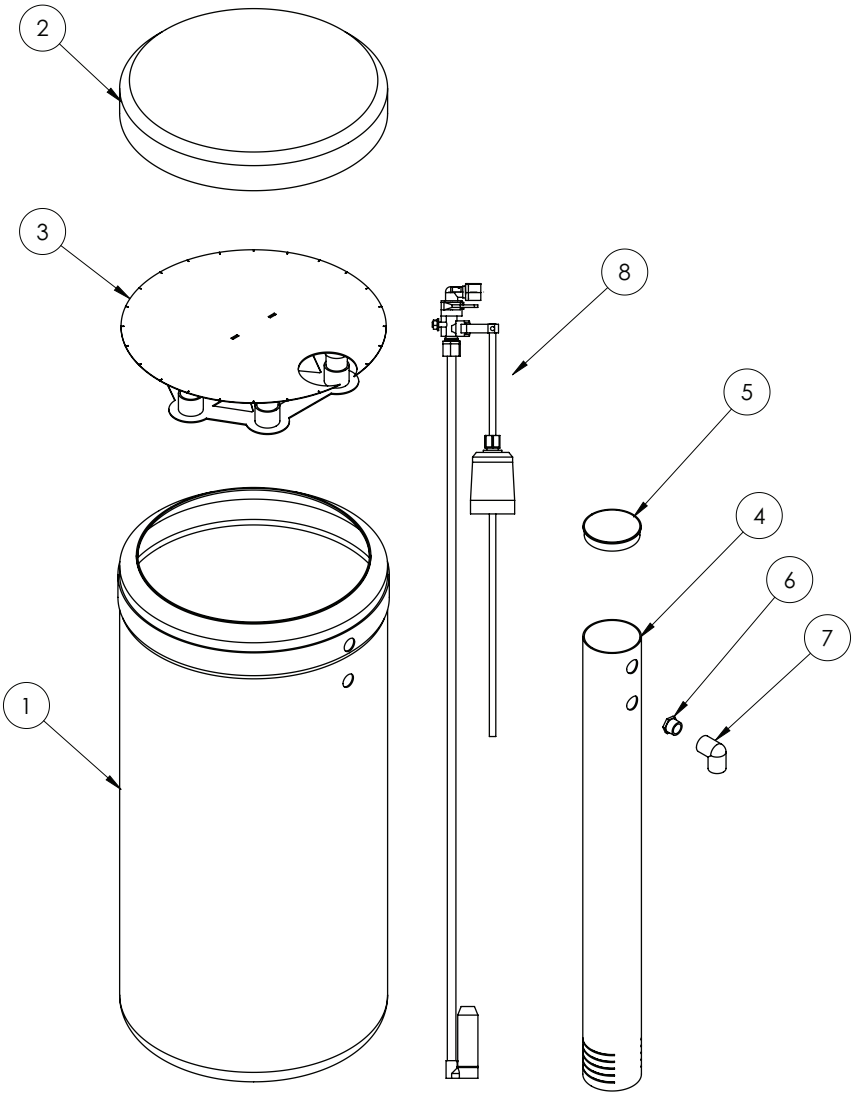

Figure 64. 24”x50” brine system.

Item No.	Part No.	Description	Qty
—	01024638	24"x50" Brine System Complete, 0.8 gpm, 1/2" Connection, 0.8 BLFC (includes items 1 - 8)	
—	01024666	Tank, Brine, 24x50, w/Well & Cover (includes items 1- 7)	
1	—	Tank	1
2	—	Cover	1
3	01019623	Salt Plate, 24"	1
4	01019621	Brine Well	1
5	01019622	Brine Well Cap	1
6	—	Bushing, 3/4" x 1" NPT	1
7	—	Elbow, 1" NPT x 1" Socket	1
8	01024634	Brine Valve, 1/2" Connection, 0.8 gpm, BLFC	1

Brine Valve Assembly

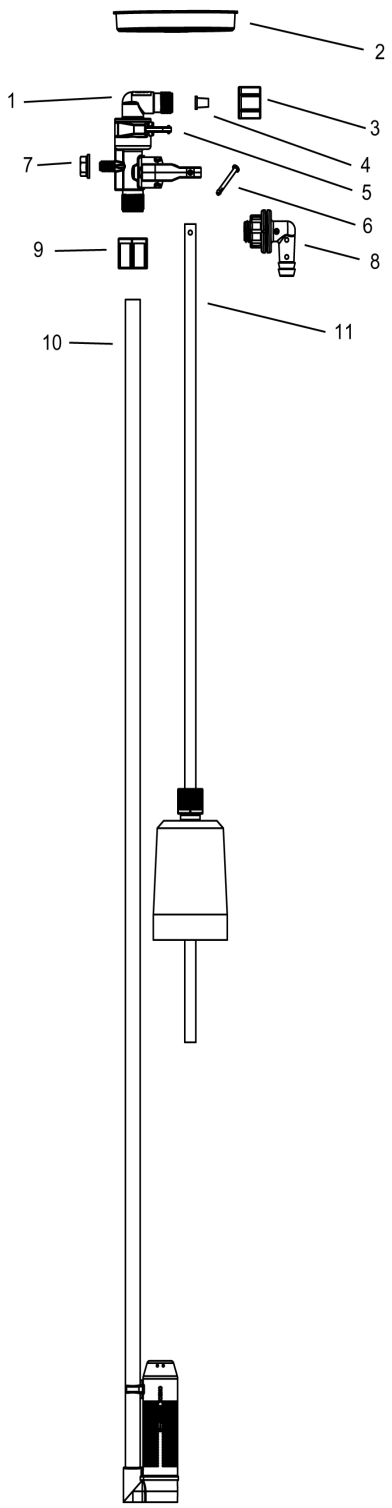

Item No.	Part No.	Description
—	01019526	Brine Valve for 18"
—	01018706	Brine Valve for 24"
1	01018710	BLFC Elbow - 0.45 gpm
	01018711	BLFC Elbow - 0.8 gpm
2	P1020194	Brine Well Cap - 24 Pack
3	P1020196	3/8” Compression Nut - 24 Pack
4	P1018871	3/8” Insert - 25 Pack
5	P1020191	Retaining Clip - 24 Pack
6	P1020192	Pin - 24 Pack
7	P1020193	5/16” Nut - 24 Pack
8	P1020190	Overflow Fitting w/ Nut - 24 Pack
9	P1020195	3/8” Nut - 24 Pack
10	P1020198	Air check Assembly - 24 Pack
11	P1020197	Float - 24 Pack

Figure 65. Brine valve assembly.

Remote Display and Accessories

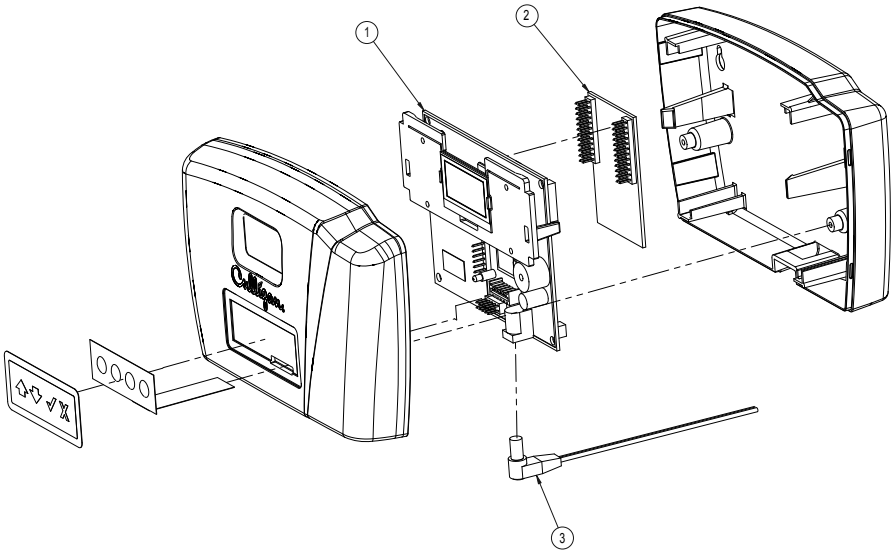

Figure 66. Remote Display.

Item No.	Part No.	Description
	01020553	Remote Display Assembly, Softener/Filter - 915 MHz, North American English Version
	D1025235	Remote Display Assembly, Softener/Filter - 869 MHz, European English Version
	D1020608	Remote Display Assembly, Softener/Filter - 869 MHz, European French Version
	D1025110	Remote Display Assembly, Softener/Filter - 869 MHz, European Italian Version
	D1025111	Remote Display Assembly, Softener/Filter - 869 MHz, European Spanish Version
1	01020749	Circuit Board, Remote Soft/Filt, English Replacement
1	01024866	Circuit Board, Remote Soft/Filt, French Replacement
1	01025113	Circuit Board, Remote Soft/Filt, Italian Replacement
1	01025114	Circuit Board, Remote Soft/Filt, Spanish Replacement
2	01020750	Circuit Board, RF, GBE, 915 MHz, North American Version
2	01020751	Circuit Board, RF, GBE, 869 MHz, European Version
3	01029455	Transformer, North American Version
3	D1030813	Transformer, EU Version
Accessories		
	01025557	Smart Brine Tank Sensor Assembly, HE Outdoor (24”x50” Brine System)
	01027289	SBT Sensor w/Chamber, HE Outdoor (18”x38” and 24”x40” Brine Systems)
	01024363	Kit Communication Cables HE1.5 PF Outdoor
	01020747	Modem
	01021507	PLC-USB Converter Cable
	01021509	PLC-RS485 Converter Cable
	01021508	PLC-RS232 Converter Cable
	01024899	Modbus, Node 12, Softener or Filter 1
	01024900	Modbus, Node 13, Softener or Filter 2
	01024925	Modbus, Profibus Converter Kit
	01025190	Modbus, BACnet, Converter Kit
	01020748	Auxiliary Circuit Board
	01022238	Alarm Relay Circuit Board

Appendix A Aqua-Sensor Guidelines

Aqua-Sensor Application Guidelines

Table 11. Aqua-Sensor Application Guidelines

Parameter	Value
Hardness (gpg as CaCO3)	7 - 99 (See Notes 1 & 2)
Soluble iron (ppm as Fe)	< 2 (See Note 3)
Manganese (ppm as Mn)	< 0.5 (See Note 4)
Hardness versus Salt Dosage	See Table 18 and Note 2
TDS to Hardness Index	TDS hardness (as CaCO3) <10 (i.e., hardness must be at least 10% of TDS; see Note 5)
Temperature, °F	Any within equipment's operating range
Alum and phosphate	Anecdotal evidence indicates potential foulant; effect has not been confirmed experimentally
Commercial cell: distance between sensing and reference cell pairs	6 inches (See Note 2)

Hardness vs. Salt Dosage

Table 12. Hardness vs. Salt Dosage

Hardness (gpg as CaCO3)	Recommended Salt Dosage (lbs/ft3)
7-10	5-6
10-15	6-8
15-25	8-9
25-50	9-11
50-75	11-12
75-99	12-16

Resin Bed Depths and Estimated Capacity Per Inch at Various Salt Dosages

Table 13. Resin Bed Depths and Estimated Capacity Per Inch at Various Salt Dosages

Model	Tank Size	Resin Qty	Depth of Resin (in.)	Grains Capacity per inch (10 lb/ft³ salt dosage)	Grains Capacity per inch (6 lb/ft³ salt dosage)	Grains Reserve Capacity@10 lb/ft³ salt dosage	Grains Reserve Capacity@ 6 lb/ft³ salt dosage
HE-060	14x47	2	22.5	2227	1782	13363	10690
HE-090	16x53	3	25.8	2909	2327	17453	13963
HE-120	16x65	4	34.4	2909	2327	17453	13963

NOTE

1. Although the Aqua-Sensor device has been used successfully on water with hardness as low as 3 gpg, there is an increased risk of missed signal (no regeneration) when the hardness is less than 6 gpg.
2. For each tank diameter, there is a specific volume of resin in the space between the cell pairs. The capacity of that resin is influenced by hardness and salt dosage. Any combination of flow rate and hardness that causes the hardness front to pass through that volume of resin in less than 6 minutes will result in the sensor failing to detect the need to regenerate. In general, the volume of resin between the cell pairs on commercial units will permit a proper signal at or below the continuous flow rating when raw water hardness is less than 50 gpg. At higher hardness levels, it may be necessary to reduce the flow rate to assure adequate sensor signal duration.
3. If precipitated or bound iron is present it must be removed before the softener.
4. Manganese can deposit on the sensor electrodes, particularly on the upper pair, causing missed signals (no regeneration). Periodic cleaning may be needed to maintain satisfactory performance.
5. Adequate signal strength has been demonstrated at ratios as high 14 but signal strength diminishes with decreasing TDS to hardness index.
6. Amount shown is based on the distance between the referencing cell pairs. Reserve capacity at salt dosages less than 15 lbs per cubic foot are shown for reference purposes only and may not provide adequate representation of actual capacity per inch of bed depth for operational purposes.

Appendix B Flow Data

High Efficiency Twin 1.5 Water Softeners—Flow Rate Data (gpm)

Table 14. High Efficiency 1.5 Twin flow rate data.

Model	Service			*Suggested Progressive Flow Trip Point	Drain			
	Minimum	Continuous	Peak		Back-wash	Brine Draw	Slow Rinse	Fast Rinse
HE-060	2.1	25.1	31.5	18.8	5.5	0.93	0.73	5.5
HE-090	2.8	26.6	35.2	20.0	5.5	1.52	1.43	5.5
HE-120	2.8	23.3	31.8	17.5	5.5	1.48	1.19	5.5
HE-150	5	27.2	35.8	20.4	7.1	1.5	1.28	7.1
HE-210	11.5	28.0	37.4	21	11.5	1.9	1.6	11.5

*The Suggested Progressive Flow Trip Point is simply a suggested flow rate at which point an additional tank will be brought on line if facility flow demand meets this rate. The Culligan Controller will not remove a tank brought on line by attaining the Trip Point unless the flow is <95% of the Trip Point amount for a 60-second period. In the event additional units are not brought on line or off line when desired, simply adjust the programmed Trip Point. Refer to the system instruction manual, Operation and Programming sections for more information about the Progressive Flow mode of operation.

Appendix C Data Port Output

Culligan Smart Controller—Data Port Output

The Smart Controller (GBE) is used to control water softeners, filters and commercial RO systems. This controller has the ability to provide status messages to a customer's equipment using RS-232 and RS-485 communication protocols. These protocols are commonly used to send information from the Smart Controller to either a customer's PC or to a building management system or programmable logic controller (PLC). The information is one way in that the Smart Controller can send this information out, but the Smart Controller cannot receive or respond to any commands sent into the communication port. The Smart Controller sends a status message every 60 seconds. The information is send as a short text (ASCII), comma separated string of letters and numbers.

The information contained in the status message depends upon what type of equipment is being controlled by the GBE.

Single Water Softener or Filter controlled by the Smart Controller

The format of the status message is: CULL,A,B,C,D,E,F,G

Example: CULL,00016524,000051.5,1,00000000,0x0000,1,0329101314

Where the values for the fields A thru F are as follows:

A = total gallons since new

B = current flow rate in gallons per minute (57.2 means 57.2 gallons per minute)

C = Current Status Indicator (0 = initialization, 1=service, 2=prerinse, 3=regen, 4= standby)

D = capacity remaining in gallons

E = Error Flag (see below)

F = 1

G = A ten-digit number representing the date and time (24-hour format)

Error Bit	Meaning
0	Internal Valve Leak
1	Salt Bridging Detected
2	Brine Line Blocked
3	Brine Tank Overfill Error
4	Replace Media Filter
5	No RF Remote Signal
6	AquaSensor Salt Error (possibly low salt or failed eduction)
7	Motor Homing Error
8	Motor Position Sensor Error
9	Low Salt Level in Brine Tank
10	(not used)
11	AquaSensor Probe Fault (probe has failed, not plugged in or AquaSensor transformer failed)
12	Less than 14 Days Salt

The error flag is sent as a hexadecimal number in the format 0xWXYZ as follows:

W				X				Y				Z			
15	14	13	12	11	10	9	8	7	6	5	4	3	2	1	0

Each error bit is either 0, meaning that this error is NOT present, or 1, meaning that this error IS present. Each of the four-bit sections (W, X, Y and Z) are then combined into a four digit binary word which is converted to a hexadecimal digit.

As an example, if there are no errors present, then the value would be 0x0000.

If there were a 'Replace Media Filter', 'Aquasensor Salt Err' and 'Motor Position Sensor Error' present then bits 4, 6 and 8 would be set to 1 and all other bits would be 0, respectively.

	W				X				Y				Z			
Error Bits	15	14	13	12	11	10	9	8	7	6	5	4	3	2	1	0
Binary	0	0	0	0	0	0	0	1	0	1	0	1	0	0	0	0
hexadecimal	0				1				5**				0			
Error Flag	0x0150															

*Note that the first two characters of the error flag are always “0x” to signify that this is a hexadecimal number

** In hexadecimal, the number 4 bit equals 1, the number 5 bit equals 2, the number 6 bit equals 4, and the number 7 bit equals 8. Therefore, when you add the #4 bit value to the #1 bit value, you get 5.

So the value of the error flag would be 0x0150 if these three errors were present.

NOTE **If the GBE is controlling a filter (instead of a water softener) then the above message definitions are identical, but that error flags 1,2,3,6,9 and 11 will always be zero for a filter.**

Progressive Flow System of Smart Controller-Controlled Water Softeners

The format of the status message for a progressive flow network consists of a series of individual lines of information, one line for each of the Smart Controller-controlled softeners. For example, in a triplex progressive flow network, every 60 seconds, the data port on the master unit will send out the following three lines of information:

CULL,A1,B1,C1,D1,E1,1,G1

CULL,A2,B2,C2,D2,E2,2,G2

CULL,A3,B3,C3,D3,E3,3,G3

example:

CULL,00052754,000003.7,1,00009110,0x0000,1,0329101314

CULL,00042674,000003.5,1,00004321,0x0000,2,0329101314

CULL,00010204,000000.0,4,00005444,0x0000,3,0329101314

The 1 at the end of the first line indicates that this line is the status for the Master unit in the progressive flow network. The 2 and 3 on the subsequent lines indicate that this data is for slave unit #1 and slave unit #2, respectively. The information contained on each line is of the same format as described in the Single softener section above.

Electrical Connections

The Culligan Data Cable Connector is terminated with a D-sub9 style female termination. The customer must provide the following pin connections:

Pin	Function
2 (Output)	RD (this line is required even though no data is sent TO the GBE board)
3 (Input)	TD (data coming FROM the GBE board
5 (Signal gnd)	GND

The data coming from the Smart Controller board is at the following conditions:

Bits Per Second: 9600
Data Bits: 8
Parity: None
Stop Bits: 1
Flow Control: None

Refer to page 64 for a list of cables currently available.

Test the Data Port

The Culligan Smart controller is capable of communicating with many different types of equipment including laptop and desktop computers running Microsoft Windows® operating systems. In order to connect the Smart Controller to a computer you will need a USB-to-GBE cable, Culligan P/N 01021507. You will also need to download a installation file from www.cport.culligan.com. It is located under the Technical Service tab and is a sub-page on the Telemetry page called How to Register and Setup Telemetry. The file is called "Setup_Culligan_GBE.EXE". Once you copy the file to your PC, you can double-click on the file to install the USB drivers and the Data Port Output Viewer to your local hard drive. You will be asked which directory you want to copy these files to. You may select any directory. Note: Previous instructions showed how to view the output in Windows' Hyperterminal. Although this is still possible, this program makes the process much more simple.

The instructions for using the program are included with the download. The program is a simple viewer window that shows the decoded messages sent to the debug port. See figure below.

The following pages describe how to send a mini report to the viewer.

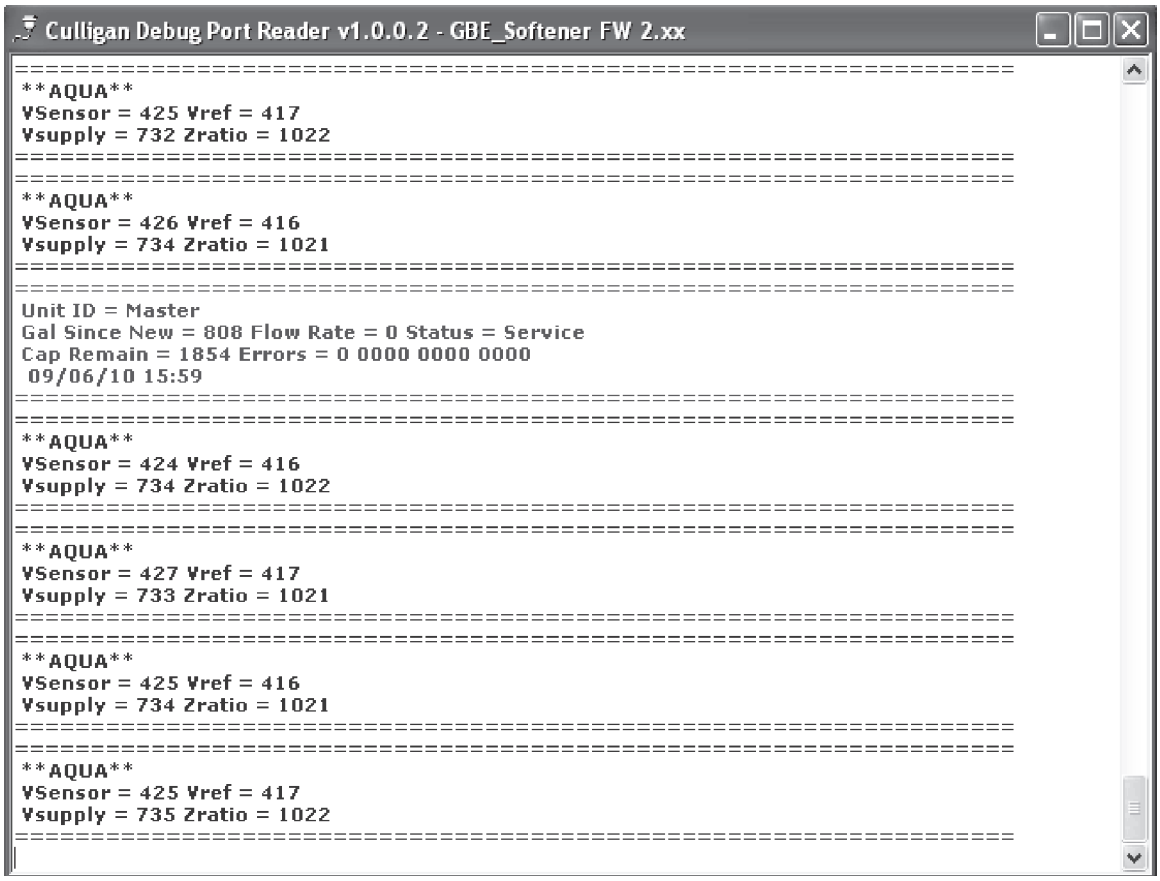

Refer to the GBE Programming for Commercial Softeners and Filters, except HF xN Manual (P/N 01027295) for instructions on obtaining a system data sheet. This manual can be obtained from your local dealer, on CPort (www.cport.culligan.com) under the Technical Service Tab or on the Service Tech App.

Operation Log

Use the log provided to maintain a record of the system operation. This can be very helpful in identifying any operation problems or maintenance requirements. Most of this information can be found by going to Diagnostics > Advanced Stats on the GBE Controller. Refer to GBE Programming for Commercial Softeners and Filters (except for HFxN) Manual (P/N 01027295) for more information. This manual can be obtained from your local dealer, CPort (www.cport.culligan.com) under the Technical Service Tab or on the Service Tech App.

Date	Soft Water Test Results	Unit ID (If Multiple)	Totalized Flow	Current Flowrate	Total Regens	Date of Last Regen	Regen Trigger

Index

Notes

This page contains materials and DCO information.

IT DOES NOT PRINT AS PART OF THE DOCUMENT!

Materials & Description: High Efficiency 1.5" Twin Softener with Smart Controller, Installation & Operating Guide with Parts Lists Cat. No. 01024821

Size: **8.5" x 11"**

Color: **Black Ink, 2-sided**

Stock: **Front (2-sided) & Back (Blank) Covers on 110# White Index**

Inside on 20# white

Other: **Collate**

Tape Bind, Black Down the 11" left side

Let	Change	By	Aprv'd	DCO	Date
A	New Art Created	JS		012612	08/08/11
A1	Revisions	JS		012819	11/01/11
B	Revisions	JS		012828	11/15/11
C	Revisions	AS	KP	012612	02/15/12
D	Revisions	AS	KP	013111	04/15/12
E	Revisions	AS	KP	013149	04/30/12
F	Revisions	KQ	KP	013284	07/31/12
G	Revisions	KQ	KP	013300	11/01/12
H	Programming Removed, Revisions	JT	DA	013931	09/06/13
H1	WQA Change - Backwash Startup Time	JT	YL	014057	10/31/13
I	SAC Updates, IAPMO Added	JT	MB	017180	05/09/17